Barron County

Waste to Energy

Brent Bohn, Plant Director

585 10 ½ Ave
Almena, WI 54805
Phone: 715-637-6890
wastetoenergy@co.barron.wi.us

REQUEST FOR BIDS

FOR

DRY RECIRCULATING SCRUBBER

Barron County Waste to Energy Facility is requesting bids for a DRS (Dry Recirculating Scrubber) including fresh reagent delivery system and waste material conveying and storage system for acid gas emissions control located at 585 10 ½ avenue, Almena, WI. 54805

Published on September 20th, 2021

Site Visit Signup Deadline October 8th, 2021 3:00 PM

Mandatory Site Visit October 11th, 2021 8:00 AM

Addenda Request Deadline: October 25th, 2021 12:00 PM

Addenda Final: November 1st, 2021 12:00 PM

Due Date: November 8th, 2021 12:00 PM

Bid Opening: November 8th, 2021 2:00 PM

Bid Award: November 15th, 2021 12:00 PM

Administered by: Barron County Waste to Energy Department

Section 1 - INTRODUCTION, INTENT and PURPOSE OF RFB

1.1 Notice to Bidders

Pursuant to General Statutes Barron County is soliciting bids for the fabrication and installation of a DRS (Dry Recirculating Scrubber) system for Acid Gas Emissions control at the Barron County Waste to Energy and Recycling Facility located at 585 10 ½ avenue, Almena, Wi. 54805. Bids will be accepted until 12:00 PM, November 8th, 2021, at the Barron County Waste to Energy Facility. All potential bidders must attend a pre-bid site inspection at 8:00 AM October 11th, 2021 at the Barron County Waste to Energy Facility. Please email Brent Bohn at **brent.bohn@co.barron.wi.us** no later than 3:00 PM October 8th, 2021 to sign up for the site visit.

Complete specifications and instructions are attached herewith

Bids shall be submitted on the bid form furnished by the County and shall be submitted in a sealed envelope identifying the bidder's name and titled DRY RECIRCULATING SCRUBBER BID 2021.

A bid bond executed by the bidder, payable to Barron County in the amount of 3% of the total bid shall be submitted with the bid.

The successful Bidder that is awarded the contract shall provide a surety to perform the contract in the form of a performance bond in agreement to pay anyone who has a direct contractual relationship with the prime contractor for the labor, services, supplies, materials, plans, or specifications it performed, furnished, or procured for the contract. The amount of the performance bond shall be for the full amount of the bid.

Barron County reserves the right to have the RFB and accompanying appendixes to the bid document reviewed by an outside engineering firm, and to allow such firm to assist with, and negotiate with the successful bidder, any discrepancies or irregularities, that may arise.

Submission of any bid signifies the Bidder's agreement that its' bid and the content thereof are valid for 90 days (three months) following the submission deadline and will become part of the contract that is negotiated between Barron County and the successful Bidder. All prices submitted with the bid shall remain in effect for a 90-day period.

Sincerely,

Brent Bohn
Barron County Waste to Energy Plant Director

1.2 Intent of this RFB

This Request for Bids (RFB) is intended to provide bidders with a common, uniform set of specifications to assist them in the development of their bids and to provide a uniform method for the County to fairly evaluate bids and subsequently select a bidder for a Dry Recirculating Scrubber.

In responding to this RFB, bidders should follow the prescribed format and use the forms included, thus providing the County with data that is easily compared with data submitted by other bidders in order to fairly and objectively evaluate the proposals.

The County assumes no responsibility for conclusions or interpretations derived from the information presented in this RFB, or otherwise distributed or made available during this bidding process. In addition, the County will not be bound by or be responsible for any explanation, interpretation or conclusions of this RFB or any documents provided by the County other than those given in writing by the County through the issuance of addenda. In no event may a bidder rely on any oral statement by the County or its' agents, advisors or consultants. It is the full responsibility of the bidder to thoroughly investigate the needs/requirements of the County not necessarily assumed in this RFB and to submit a bid for the Dry Recirculating Scrubber pursuant to the standards required by facility Air Pollution Control Operation Permit NO.: 60304904A-P20.

1.3 Purpose

The purpose of this document is to provide guidance to successfully provide a bid for a DRY RECIRCULATING SCRUBBER including fresh reagent delivery system and waste material conveying and storage system for acid gas emissions control.

Section 2 - REQUEST FOR BIDS

2.1 Issuing Office and Inquiries

This Request for Bids (RFB) is issued by the Barron County Waste to Energy Facility Department on behalf of Barron County. Any inquiries, clarifications, or interpretations regarding this RFB should be directed by Email to:

brent.bohn@co.barron.wi.us

All inquiries, clarifications, or interpretations will be accepted until October 25th, 2021, 12:00 PM. Responses to inquiries that affect the content of this RFB will be provided in writing to all recipients of the RFB through an addendum. Final addendum will be provided no later than November 1st, 2021 12:00 PM. It is the responsibility of each bidder to inquire about any aspect of the RFB that is not fully understood or is believed to be susceptible to more than one interpretation. The County will accept only written inquiries regarding this RFB. The County's interpretation of the RFB shall be controlling in all cases.

2.2 Submission of Bids

Bids must be presented on the bid/specification form attached to this RFB in a sealed envelope and mailed or delivered to:

Barron County Waste to Energy
585 10 ½ avenue
Almena, WI. 54805

Any bid submitted on forms other than the Barron County Waste to Energy Bid form may be disqualified. BIDS SUBMITTED VIA EMAIL TELEPHONE, AND/OR FAXED CANNOT BE ACCEPTED. All bids submitted must be typed or written in ink and signed by the bidder's designated representative. Bids shall be clearly marked DRY RECIRCULATING SCRUBBER BID 2021.

Bidders must submit one original and one (1) complete copy of bid.

No responsibility shall be attached to the County for the premature opening of any bid proposal not properly addressed or identified.

In order to be considered, for selection, bids must be received by the date, time and place previously outlined. The bidding process will be considered closed at 12:00 PM, November 8th, 2021. Failure to meet this deadline will disqualify the bidder.

2.3 Addenda

No oral statements, explanations, or commitments by anyone shall be of any effect unless incorporated into the addenda. It is the responsibility of the Bidder to periodically check with the County's representative before submitting a bid to obtain any addenda that have been issued. Addenda request deadline will be 12:00 PM, October 25th, 2021.

2.4 Content of Bid

Bidders shall not be allowed to submit additional documentation once bids are opened. Care should be taken to ensure that information provided is accurate, complete, and consistent. Omission of any of the required information may subject the Bidder to disqualification.

2.5 Bid Pricing

All bid prices shall be complete and include any warranty. The Bid Form shall be used for the purpose of providing these prices. All bid prices and conditions must be specified on the Bid Form. Bid prices shall be valid for at least 90 days from the date of the Bid Opening, or as otherwise specified on the Bid Form.

2.6 Exceptions to the RFB

Any exceptions to these specifications indicated must be clearly listed and explained on the Exception Form (APPENDIX A.), included in this RFB. Otherwise, it will be considered that the items offered are in strict compliance with these specifications and the successful bidder will be held responsible for meeting these specifications. Any exceptions must be referenced by section number and explained in detail on the Exception Form. Any bidder not complying shall not be considered as responsive.

2.7 Bid Opening

Bids will be opened at 2:00 PM on November 8th, 2021 at the Barron County Waste to Energy Facility located at 585 10 ½ avenue, Almena WI. 54805

2.8 Bid Withdrawal

If the Bidder desires to withdraw their bid, a request must be submitted before the bid opening, in writing to explain the purpose for withdrawal.

2.9 Bids Property of County

All bids submitted in response to this RFB become the property of the County once they are opened. All submitted proposals and supporting material are a matter of public record.

2.10 Rejection of Bid

The County reserves the right to reject any or all bids, with or without cause, and to waive informalities when such rejection is in the interest of the County. Barron County also reserves the right to reject the bid of a bidder who has previously failed to perform properly or complete on-time a contract of similar nature.

2.11 Disqualification of Bidders

More than one bid from an individual, firm, partnership, corporation, or association under a different name or names shall not be considered. Any or all bids shall be rejected if there is reason to believe that collusion exists among the bidders. In this situation all participants in such collusion shall not be considered for the current or future bids for the same work. No contract shall be awarded except to competent bidders capable of performing the class of work contemplated.

2.12 Award

The award of this bid(s) will not be based solely on lowest price. The award will be based and granted on "BEST VALUE". "BEST VALUE" will allow Barron County to consider factors beyond pricing such as whether the responsible bidder is able to meet and/or exceed the required specifications. "BEST VALUE" will permit and reflect prudent stewardship of public funds and trust, allowing the acceptance of bid(s) that will be the most advantageous to Barron County.

2.13 Notification of Award

After all prerequisites and specifications have been met by the bidder and the award for this bid is made, the successful bidder will be notified. Barron County Waste to Energy Department will notify the successful bidder in writing. VERBAL NOTIFICATION OF THE AWARD IS NOT CONSIDERED A RELIABLE MODE OF NOTIFICATION AND, THEREFORE, WILL NOT BE RECOGNIZED AS AN OFFICIAL NOTIFICATION.

2.14 Bidder's Guarantee

By submitting a bid on these specifications, the bidder binds himself to all conditions in these specifications. Any variance with the specifications must be stated with the submitted bid and may, after review of all consequences of the variance, disqualify the bid.

2.15 Insurance

Refer to EXHIBIT A.

2.16 Completion Requirement

A guaranteed completion date will be October 31st, 2022. Any bidder who submits a bid(s) on these specifications agrees to complete the project by October 31st, 2022. If bidder feels the requested completion date cannot be met, the bidder shall so state and give revised date with bid. The completion schedules that are submitted by the bidder and agreed upon by the County shall automatically become binding upon the successful bidder.
Failure to comply with the guaranteed completion date will result in a penalty of not less than $250.00 per day until completion.

2.17 Plant Outage Duration Requirement

The "plant outage" is defined as the time (in hours) that the entire plant (both units, #1 and #2) are not combusting waste nor producing steam.
The plant outage duration schedule that is submitted by bidder and agreed upon by the County shall automatically become binding upon the successful bidder. Failure to comply with the guaranteed plant outage duration will result in a penalty of not less than $250.00 per hour until completion.

2.18 Air / Energy / Water Requirements

- Bidder shall provide Air, Energy and Water requirements for DRS system with the initial bid.
- Successful bidder shall provide tie in information (e.g. pipe / conduit sizes and approximate locations) for air / energy / water requirements no later than June 1st, 2022.

2.19 Inspections

The successful bidder acknowledges and understands that the completion of the project must meet all Barron County requirements and State regulations. Therefore, Barron County Waste to Energy Department will make regular inspections of the site to ensure compliance. A final site inspection will be completed prior to final payment.

2.20 Pre-Bid Site Visit

Given the nature of the project, all prospective bidders shall attend a pre-bid site inspection of the Barron County Waste to Energy Facility. The pre-bid site visit will be at 8:00 AM October 11th, 2021. The Barron County Waste to Energy Facility is located at 585 10 ½ avenue, Almena WI. 54805.
All potential Bidders must contact Brent Bohn via email at brent.bohn@co.barron.wi.us no later than 3:00 PM on October 8th, 2021 to sign up for the site visit. Failure to attend the site visit may result in the disqualification of the bid.

2.21 Non-Collusion

By executing and submitting this bid, the Bidder certifies that his bid is made without reference to any other bid and without any agreement, understanding, collusion or combination with any other person in reference to such bidding.

2.22 Warranty / Liability on performance

The successful bidder shall provide a warranty for installation and operation consistent with a project of this scope. Upon completion of installation, bidder will provide start-up procedures and observe proper operations of all equipment installed. For a period of not less than 90 days bidder will confirm efficiency ratings per equipment design specifications.

2.23 Performance Guarantee

The successful bidder shall guarantee the performance of the DRS regarding the following operating conditions:
. 90% SO2 removal at 54,089 acfm flue gas flow (measured at stack) utilizing no more than 150 pounds per hour of lime reagent.

2.24 Taxes

Taxes should not be included in the bid. Any sales tax items should be listed as a separate item at time of invoicing.

2.25 Schedule of Payment

It is the desire of Barron County to pay promptly. It is the bidder's responsibility to submit a schedule of payments. The schedule of payments will include the item(s) for each schedule of payment including completeness of each item(s). Bidder will invoice accordingly to schedule provided. Bidders must provide tax information to include bidder's full business name, address, "remit to" address, and federal tax identification number, through submission of a completed W-9.

2.26 Indemnification

The successful bidder shall hold Barron County, it's elected officials, agents, and employees, harmless from all liabilities, obligations, losses, claims, damages, actions, suits, proceedings, costs, expenses, including attorneys' fees, that:
a) Arise out of, are connected with, or result directly or indirectly from the successful bidder's failure to perform any of its obligations under this request for bids; or
b) Are a result, of a breach of any of the successful bidder's warranties. No indemnification responsibilities created by this section shall survive and be enforceable after the contract between the County and the successful bidder terminates or expires, and they shall be terminated only by written agreement of the successful bidder and the County.

2.27 Decision is FINAL

The awarding of the contract and acceptance of the bid package for the construction of the Dry Recirculating Scrubber, by the Barron County Solid Waste Board is FINAL.

Section 3 – BID SPECIFICATIONS

3.1 General Project Information

The Barron County Waste to Energy Facility is a Municipal Solid Waste incinerator licensed currently to burn 100 TPD. The incinerators are of the manufacturer Consumat model CS-1600 design. The combustors consist of two separate dual-chambered, stepped hearth, starved air incinerators. A more complete description of the facilities layout can be reviewed within the facilities Plan of Operations. See appendix B.

This RFB is for design, fabrication and installation of a Dry Recirculating Scrubber system including start-up operations.

3.2 Design Criteria

Bidder must assure design is consistent with all applicable criteria as specified per the facilities Air Pollution Control Operation Permit NO.: 60304904A-P20. See appendix C.

Bidder has access to engineering data that has been provided to the WDNR during the most recent Air Permit Renewal. See appendix D.

3.3 Information and Materials supplied by Barron County:

- Geotechnical report for foundation design.
- Duct sizes at determined connection points.
- Existing building blueprints.

Barron County

Waste to Energy

Brent Bohn, Plant Director

585 10 ½ Ave
Almena, WI 54805
Phone: 715-637-6890
wastetoenergy@co.barron.wi.us

BID FORM

DRY RECIRCULATING SCRUBBER (DRS)

Barron County Waste to Energy

I, (We), the undersigned after reading and fully understanding the terms, conditions and specifications of Request for Bids – DRY RECIRCULATING SCRUBBER agree to furnish a firm fixed price (excluding tax).

ITEM NO.	DESCRIPTION	COST
1.	Process Gas Duct. Including design, engineering and installation from the Incinerator common duct to the inlet of the DRS.	$_____
2.	DRS outlet to existing Baghouse inlet duct including design, engineering, fabrication and installation.	$_____
3.	Fresh Reagent delivering system from existing storage silo to DRS.	$_____
4.	Waste material conveying and storage system including waste conveying system to existing baghouse discharge system.	$_____
5.	Excavation and foundation for DRS system.	$_____
6.	DRS System engineering, fabrication and installation.	$_____
6.	Outage duration time (reference 2.17 in RFB)	_____

Completion Date: _____

Company Name: _____
Address: _____
City:_____ State: _____ Zip Code: _____
Telephone: _____ Fax: _____
Email Address: _____
Print Name: _____
Authorized Signature: _____

EXHIBIT A

Insurance:

Contractor agrees to maintain policies of insurance and proof of financial responsibility to cover costs as may arise from claims for damages to property of and/or claims which may arise out of or result from Contractors activities, by whomever performed, in such coverage and amounts as required and approved by the County. Acceptable proof of such coverage shall be furnished to the County prior to commencement of activities under this agreement. A Certificate of Insurance shall be submitted for review for each successive period of coverage for the duration of this agreement, unless otherwise specified by the County, in the minimum amounts specified below.

Contractor shall provide evidence of the following coverages and minimum amounts:

Type of Coverage	Minimum Limits
Wisconsin Workers' Compensation and Employer's Liability & Disease	Statutory/Waiver of Subrogation $100,000/$500,000/$100,000
General Liability Bodily Injury and Property Damage to include: Personal Injury, Fire, Products and Completed Operations	$5,000,000 Per Occurrence $5,000,000 Aggregate Limits can be met with Umbrella Policy
Automobile Liability Bodily Injury and Property Damage All Autos	$1,000,000 Per Accident
Professional Liability Refer to Additional Provision A.1.	$2,000,000 Per Occurrence $2,000,000 Aggregate
Contractors Pollution Liability	$1,000,000 Per Occurrence $1,000,000 Aggregate

Barron County shall be named as an Additional Insured on the General, Automobile, and Contractors Pollution Liability policies as respects the services provided in this agreement. A Waiver of Subrogation shall be afforded to Barron County on the Workers' Compensation and Contractors Pollution policy. A thirty (30) day written notice of cancellation or non-renewal shall be afforded to Barron County.

The insurance specified above shall be placed with a Carrier approved to do business in the State of Wisconsin. All carriers must be A- rated or better per AM Best's Rating Guide. Any requests for deviations from or waivers of required coverages or minimums shall be submitted in writing and approved by Barron County's Designated Representative as a condition of this agreement.

A.1. Professional Liability – Additional Provision.

Contractor agrees to provide additional information on its professional liability coverage as respects policy type, i.e. errors and omissions for consultants, architects, and/or engineers, etc.; applicable retention levels; coverage form, i.e. claims made, occurrence; discover clause conditions, and effective retroactive and expiration dates, to Barron County's Designated Representative as may be requested to obtain approval of coverage as respects this section.

It is understood and agreed that coverage which applies to the services inherent in this agreement will be extended for two (2) years after completion of all work contemplated on this project if coverage is written on a claims-made basis.

Barron County

Due Date:

DRY RECIRCULATING SCRUBBER BID 2021

Appendix A - EXCEPTION FORM

Section Number	Explanation

Signature: Date:

Print Name:

Title:

Company:

Address:

Email:

Telephone:

PLAN MODIFICATION
UPDATING THE
PLAN OF OPERATIONS

WASTE-TO-ENERGY FACILITY
BARRON COUNTY
ALMENA, WI

BWTE-01-17

August 2018
Updated August 2019

Plan Modification
Updating the
Plan of Operations

Prepared for:

Barron County Waste-to-Energy
585 10 ½ Avenue
Almena, WI 54805
Contact: Ray Zeman – Plant Manager

Prepared by:

Oakridge Engineering, Inc.
P.O. Box 44
Chippewa Falls, WI 54729
Phone: 715-723-6777
Toll Free: 866-944-6777

Prepared By:

Erik T. Lietz, PE

8/14/19
Date

Distribution List

# of Copies		Recipient
Hard Copy	**Digital Copy**	
2	1	Ray Zeman – Plant Manager Barron County Waste-to-Energy 585 10 ½ Avenue Almena, WI 54805
-	1	Jeff French – Administrator Barron County 335 E. Monroe Ave Barron, WI 54812
1	1	Sonny Zentner, PE Wisconsin Department of Natural Resources 1300 W. Clairemont Ave Eau Claire, WI 54701
1	1	Bob Germer Wisconsin Department of Natural Resources 810 W. Maple Street Spooner, WI 54801
1	1	Myron Smith Wisconsin Department of Natural Resources 3550 Mormon Coulee Road La Crosse, WI 54601
1	1	File Copy – Oakridge Engineering Inc.

Table of Contents

1.0 Introduction---------- 6
2.0 Certification---------- 6
3.0 General Facility Information---------- 7
3.1 Barron County Waste-to-Energy Facility---------- 7
3.1.1 Licenses and Permits---------- 7
3.1.2 Location and Property---------- 7
3.2 Facility Personnel---------- 8
3.3 Locational Criteria---------- 8
3.4 Emergency Response---------- 9
3.5 File Storage---------- 9
4.0 Facility Operations and Equipment---------- 10
4.1 Facility Process Description---------- 10
4.2 Major Equipment---------- 10
4.2.1 Combustors---------- 10
4.2.2 Boilers---------- 11
4.2.4 Turbines---------- 11
4.2.5 Flue Gas and Emission Controls---------- 11
4.2.6 Ash and Unburned Material Handling---------- 11
4.2.7 Water Source---------- 12
4.2.8 Major Equipment Replacements & Modifications---------- 12
4.3 Dust and Windblown Debris Control---------- 12
4.4 Odor Control---------- 12
4.5 Fire Control---------- 13
4.6 Volume Reduction---------- 13
4.7 Maintenance Schedule---------- 13
5.0 Waste and Waste Handling---------- 14
5.1 Service Area, Population, and Facilities Served---------- 14
5.1.1 Service Area---------- 14
5.1.2 Population---------- 14
5.1.3 Facilities Served---------- 16
5.2 Types of Waste---------- 17
5.2.1 Allowed Wastes---------- 17

5.2.2 Prohibited Wastes---------- 18
5.2.3 Over-Capacity Wastes---------- 18
5.3 Residuals Disposal---------- 19
5.3.1 Ash and Unburned Waste---------- 19
5.3.2 Liquid Waste---------- 19
5.3.3 Undesirable Waste---------- 19
5.4 Waste Screening Plan---------- 20
5.4.1 Prohibited Wastes---------- 20
5.4.2 Undesirable Waste---------- 21
5.4.3 Contaminated Soils---------- 21
5.4.4 Tires---------- 21
5.4.5 Waste Screening Authority---------- 21
5.5 Waste Handling---------- 22
5.5.1 Traffic Flow and Control---------- 22
5.5.2 Weighing---------- 22
5.5.2 Tipping Floor---------- 22
5.5.3 Waste Sorting and Handling---------- 22
5.5.4 Combustor Charging---------- 22
5.5.4 Residuals---------- 23
6.0 Definitions and Acronyms---------- 24
7.0 Amendments---------- 27

Appendices

Appendix A – Drawings

Appendix B – WTE Facility Process Flow Diagram

Appendix C – Ash Disposal Agreement

Appendix D – Special Waste Profile

Appendix E – Incinerator Bottom Ash Sampling Procedure

Appendix F – Bottom Ash Request for Analytical Testing

1.0 Introduction

This plan modification updating the Plan of Operations has been prepared for the Barron County Waste-to-Energy facility located near Almena, Wisconsin. This facility operates and is permitted as a MSW combustor, and is regulated by NR 502.13. The contents of this plan modification updating the Plan of Operations shall meet the requirements of NR 502.13(3) and also includes specific contents requested by Wisconsin Department of Natural Resource staff who oversee this facility.

For clarity of this plan modification updating the Plan of Operations, since this document does not cover operations at the attached recycling MRF, the "Facility" will be referring only to the waste combustor operation, the Waste-to-Energy facility. See Section 6.0 for further definitions of terms used throughout this document.

2.0 Certification

Per Wisconsin Administrative Code, NR 500.05(4)(a), Oakridge Engineering is providing the following statement regarding this document:

"I, Erik T. Lietz, PE, hereby certify that I am a licensed professional engineer in the State of Wisconsin in accordance with the requirements of ch. A-E 4, Wis. Adm. Code; that this document has been prepared in accordance with the Rules of Professional Conduct in ch. A-E 8, Wis. Adm. Code; and that, to the best of my knowledge, all information contained in this document is correct and the document was prepared in compliance with all applicable requirements in chs. NR 500 to 538, Wis. Adm. Code."

According to NR 500.05(4)(b) any plan of operations, such as this document, requires that a professional geologist certify this document. However for this particular facility there is no interpretation of geology or geological requirements. Therefore no professional geologist certification is provided.

3.0 General Facility Information

3.1 Barron County Waste-to-Energy Facility

The formal name of the facility is the Barron County Waste-to Energy (WTE) facility together with the recycling Materials Recovery Facility (MRF) the combined waste management system is known as the Barron County Municipal Solid Waste Recovery System (MSWRS). For clarity of this plan modification updating the Plan of Operations, since this document does not cover operations at the MRF, the "Facility" will be referring only to the waste combustor operation, the WTE facility.

Owner and Operator
The WTE facility has been owned by Barron County since it was constructed in 1986. As of June 29, 2017 the WTE facility is operated by Barron County, Wisconsin. From 1991 to June 2017 the WTE facility was operated by a third party management and operations company.

Contact Information
Contact information for the WTE facility is as follows:

Phone: 715.357.6566
Email: wastetoenergy@co.barron.wi.us

Hours of Operation
The WTE facility is operated continuously, 24 hours a day, 7 days a week, 365 days per year. In the event of a scheduled or unscheduled facility shutdown, staff maintain their normal work patterns and hours. The WTE facility is continually staffed.

Hours of Waste Receipt
Posted hours for receiving waste is from 8 am to 4 pm, daily (7-days a week). However, due to the continuous operation of the facility, waste can be received at any hour of the day with appropriate notice to the WTE facility staff.

3.1.1 Licenses and Permits

The WTE facility operates under the following licenses and permits:

Facility Identification (FID):
603049040

Solid Waste License:
3091

Air Permit:
Construction: 13-POY-043
Operation: 603049040-P10

3.1.2 Location and Property

Address
The WTE facility is located at 585 10 ½ Avenue, Almena, WI 54805.

Please note that previous Department correspondence incorrectly listed the street address at 575 10 ½ Avenue.

Legal Location
The WTE facility is located at NE ¼, SE ¼, Section 12, T33N, R14W, Town of Turtle Lake.

Property
The WTE facility is located on a two separate parcels. The majority of the WTE facility, including all of the buildings are located on a 5.00 acre parcel. This parcel has the identification number 048-1200-25-022. The second parcel is 9.94 acres and has an identification number 048-1200-25-033. See Drawing 1 in Appendix A for a map of the facility property.

3.2 Facility Personnel

In accordance with NR 502.13(11) and Part I.B.8.1.a&b, the WTE facility is operated under the direction of personnel meeting the operator qualification requirements of §285.51. Since the facility is operated continuously, there is always a minimum of 1 certified operator on duty at all times the facility is operating, including burn-down cycles. In addition, the WTE facility employs multiple chief facility operators. Table 3-1 lists the certified personnel by name, title, operator type, and operator license number. It is the policy of the County to provide continuing education in order to maintain Department specific licensure renewal criteria.

Table 3 – 1 Licensed Facility Personnel

Name	Position	Certification Type	Certification #
Raymond Zeman	Plant Manager	Chief Facility Operator	90084
Brent Bohn	Assistant Manager	Chief Facility Operator	90201
Mark Clark	Supervisor	Chief Facility Operator	90203
Andrew Hanson	Maintenance Supervisor	Chief Facility Operator	90221
Mark Brunette	Supervisor	Shift Operator	90167
David Jones	Project Fabricator	Shift Operator	90170

All staff and certification numbers are current as of the date of this report.

3.3 Locational Criteria

According to NR 502.13(2)(a), a MSW combustor facility must be located 1) outside of a floodplain and 2) greater than 250 feet from a private water supply well or greater than 1,200 feet from a public water supply well.

1. Reviewing FEMA floodplain maps, the WTE facility is not located in a floodplain.

2. Reviewing available well records, there are no private water supply wells within 250 feet and there are no public water supply wells within 1 mile of the facility. There is no well on the WTE facility property. The closest neighboring well is located approximately 260 feet east of the ash handling area of the WTE facility. This well is located at 597 10 ½ Avenue, Almena, WI 54805 (Twin Town Store). This well is approximately 360 feet east of the combustor equipment. There are also wells located north of the WTE facility at the cheese factory located north of 10 ½ Avenue west of their building. These wells are approximately 600 feet from the WTE facility. The wells at the cheese factory are the only source of water for the WTE facility (potable and process water).

3.4 Emergency Response

In the event of an emergency at the WTE facility, the facility has a dedicated Emergency Malfunction Preventive Abatement Plan that will be followed for the specific type of emergency encountered. In all emergency cases, the WTE facility staff are instructed to call 911. The following first response agencies are in the nearby vicinity:

Firefighting services are provided by the Town of Almena Fire Department.

Emergency medical services are provided by Barron Emergency Medical Service.

Law enforcement is provided by the Barron County Sherriff's Department.

3.5 File Storage

All hard copy files associated with the design, permitting, and operation of the facility are located on-site within dedicated storage areas (office spaces) within the facility. Hard copies are available for review by regulatory staff at the WTE facility. As more historical documents are converted to electronic copies and as new copies are electronic, off-site electronic backup storage of files are maintained by Barron County in accordance with the County's specific procedures.

4.0 Facility Operations and Equipment

4.1 Facility Process Description

The WTE facility operates two municipal solid waste combustors and a diesel standby electric generator. The two dual-chambered, stepped hearth, starved air incinerators have a combined combustion capacity currently rated at 100 tons per day (tpd). A generalized description of the mechanical process flow is provided below. A process flow diagram for the WTE facility is included in Appendix B.

MSW is received at the WTE facility, after weighing on the facility's scale, and unloaded on the receiving/tipping floor. Once unloaded in the receiving/tipping floor, a front-end loader sorts the material and removes unwanted materials (metal, electronic waste, drywall, etc.). The material is then mixed by the front-end loader and staged within the receiving area until it can be placed in each of the combustors charging pit. An operator uses the loader to push MSW into the charging pit where it enters each combustor through a vertical door. The combustors are loaded as-needed to maintain optimum fuel to air ratios in the combustion chambers.

Each combustors is constructed with two chambers. The lower chamber, which receives the raw MSW from the charging pit, operates as a starved air unit and is given a reduced level of air/oxygen as compared to what is needed for full combustion. This gasifies a portion of the organic material in the waste, which is then sent to an upper secondary chamber. The secondary chamber operates as a forced air unit where a surplus of air/oxygen is present where combustion is completed.

The upper combustor gas enters a two drum boiler where steam is generated. High-pressure, superheated steam drives a backpressure steam turbine generator (BSTG). Discharge from the BSTG is distributed to a third party customer, internal systems, and returned to a low pressure superheater. The low pressure superheated steam drives a condensing steam turbine generator (CSTG) and is eventually condensed to water where it is reintroduced to the various facility components and the boiler sections. Two turbine-generators (BSTG and CSTG) generate electricity for WTE facility internal use and for third party sale.

Ash and unburned materials are removed from the system via a water quench sump using an inclined dragline conveyor which also aids in the dewatering process. After the conveyor, this ash is passed under a magnetic separator where ferrous metals are removed by a magnet and eventually hauled to a recycler (metal recovery is currently not used due to failing metal markets). Remaining ash material is staged in the ash storage area of the building for additional dewatering before being disposed at an off-site landfill. Ash is currently disposed at the Republic Services Landfill near Sarona, Wisconsin, which is a Department licensed and approved MSW landfill. Prohibited or undesirable waste materials are sent to a landfill for disposal or recycled as appropriate.

4.2 Major Equipment

4.2.1 Combustors

The combustors consist of two separate dual-chambered, stepped hearth, starved air incinerators manufactured by Consumat, (model CS-1600). They were originally installed in August 1986. The combined combustion capacity of the combustors are 100 tons per day (TPD). The burn rate of 100 TPD is limited by the WTE facility air permit, part I.B.1.a(8) and part I.C.2.a.(1).

4.2.2 Boilers

There are two separate boilers, one for each of the combustors. These boilers were originally installed in 1986 and have had various repairs and re-tubing of boiler tubes. The boilers are rated for 500 psi and have unique regulated object I.D. numbers (617312 and 617313). The boilers are permitted and inspected under the jurisdiction of the Wisconsin Department of Safety and Professional Services (DSPS).

4.2.4 Turbines

The WTE facility has two separate steam powered electrical generation turbines. They are described below:

Backpressure Steam Turbine Generator (BSTG)
The BSTG uses high-pressure superheated steam to drive an electric generator. The BSTG is rated for 450 kW. After the steam is used in the BSTG it is reduced to 100 psi and sent to a third party customer for use in their own facility. The BSTG was installed in 1986 and is located in the first floor turbine room.

Condensing Steam Turbine Generator (CSTG)
Excess steam that is not utilized by the third party customer is sent to the CSTG. The CSTG uses low-pressure steam to drive an electric generator. The CSTG is rated for 1,416 kW. The CSTG was installed in 2010 and is located in the second floor turbine room addition.

4.2.5 Flue Gas and Emission Controls

After combustion and passing through the boilers, the flue gas is routed into a common exhaust duct. Emissions controls and processes are applied to the flue gas while in this common exhaust duct. Activated carbon and high-calcium hydrated lime are injected into the common exhaust duct in accordance with the WTE facility's air permit. The common exhaust duct is routed to the exterior bag house building, constructed in 2006. In the bag house, the flue gas is filtered by multiple filter bags. Captured fly ash from the bag house is conveyed to the ash quench trough through screw conveyors.

After filtering flue gas in the bag house, the flue gas is sent to the exhaust stack via 2 variable speed induced draft fans. The induced draft fans are rated for 15,000 to 24,000 ACFM each. Currently the WTE facility has an exhaust stack 3.0 feet inside diameter extending 100 feet above ground level. There is no rain hat or other vertical impeding device on the existing exhaust stack. As required by the construction air permit, Part I.A.7.a.2, by May 2019, the stack must be at least 136 feet above ground level, not exceed 4.5 feet inside diameter and not equipped with a rain hat or other upward flow impeding device. In October 2018 the WTE facility replaced the existing exhaust with a new exhaust stack meeting the requirements of the construction air permit.

4.2.6 Ash and Unburned Material Handling

Hot ash and other unburned materials are periodically emptied from the bottom of the combustor. These hot materials are dumped into a quenching trough filled with water. Fly ash is also dumped into the quenching trough through a screw conveyor from the bag house. The quenched ash and unburned materials are removed from the quench trough using a submerged and then inclined dragline. The inclined dragline allows for some material dewatering before the materials is transferred into the ash storage room. Once in the ash storage room, the wet ash and other materials are moved from the dragline discharge by mechanical equipment (usually a front-end loader) and stored into one of three bays within the ash storage room. Additional dewatering occurs while beings stored in the ash storage

room. Ash is dewatered to a point that no seeping shall occur after being loaded into trucks for transport. Ash and unburned material disposal is further described in Section 5.3.1.

4.2.7 Water Source

There is no on-site water source for either potable or process water. All water that enters the facility comes from the cheese factory (currently Saputo Cheese USA) located across 10 ½ Avenue. Water enters the facility through condensate return pipes (currently 2 different pipes). When additional water is required to replenish water lost, electrically operated pumps allow additional potable water to flow from the cheese factory to the WTE facility. These pumps are controlled automatically by the WTE facility. See Drawing 2 & 3 in Appendix A for the site plan showing condensate and steam pipes.

Process water is treated in the WTE facility multiple times. 'Clean' process waste water, from sources such as boiler blow-down and deionizing regeneration, is stored and then used for floor and equipment washing water. Once used for cleaning water, the re-used water is stored as 'dirty water'. The 'dirty water' is used as ash quench water makeup.

Waste water is further described in Section 5.3.2.

4.2.8 Major Equipment Replacements & Modifications

The following table illustrates when major equipment was either replaced, modified, or installed if installation was after initial construction of the WTE facility.

Table 4-1 – Major Equipment Replacements & Modifications

Year of Work	Equipment	Modification	Replacement	Initial Installation
1999	Ash Magnet			X
2003	Reaction Chamber			X
2004	Boiler Expansion	X		
2006	Bag House			X
2010	CSTG			X
2018	#1 Ash Ram Sump		X	
2018	Exhaust Stack		X	
2019	#2 Ash Ram Sump		X	

4.3 Dust and Windblown Debris Control

All wastes are dumped and stored inside the building on the enclosed tipping floor. Dust and windblown debris from waste is not a concern as all waste sorting and handling is performed indoors. Further, the air used for combustion is pulled from within the building which creates a negative air pressure inside the building. This negative air pressure in the building reduces dust escaping the WTE facility. All ash materials, including both bottom and fly ash, are quenched in a water bath. After cooling in the quench water bath the ash is stored and hauled off-site for disposal in a saturated state. The ash hauling truck uses a tarp to cover the ash load as it is hauled off-site.

4.4 Odor Control

All wastes are dumped and stored inside the building on the enclosed tipping floor. Odor from waste is minimized as all waste sorting and handling is performed indoors. As the waste is brought to the WTE facility, wastes are stored on one side of the tipping floor while wastes on the other side of the tipping floor are fed into the combustors. Waste is completely removed from each side prior to storing more waste on that side. With this operation, wastes are not normally stored on the tipping floor for more than three consecutive days.

Further, the air used for combustion is pulled from within the building which creates a negative air pressure inside the building. This negative air pressure in the building reduces objectionable odors from escaping the WTE facility.

4.5 Fire Control

Fire control of wastes on the tipping floor is managed by a fire hose located directly on the tipping floor area near the loading chutes. This fire hose is used by WTE facility personnel to suppress any fires in received wastes as they are managing, mixing, and loading wastes into the combustors.

Fire suppression in the remainder of the building (in addition to the tipping floor) is managed by a building wide fire sprinkler system. This system is fed by dedicated fire suppression pumps with water stored beneath the tipping floor. The water is stored in a sealed (no personnel access) below ground reinforced concrete tank with an approximate volume of 90,000 gallons.

4.6 Volume Reduction

The WTE facility operates as a mass-burn type combustion system. As such, there is no pre-processing of wastes such as shredding or grinding. Undesirable wastes are removed from the wastes combusted in accordance with the waste screening plan (see Section 5.4).

Other incoming waste volume reduction efforts include recycling of materials through the Barron County's recycling operation in the adjacent recycling material recovery facility (MRF) area.

4.7 Maintenance Schedule

The WTE facility regularly maintains its equipment and major components in order to keep the facility running as much as possible. The WTE facility staff uses a Malfunction Preventive Abatement Plan as part of the facility air permit requirements to schedule inspections, preventative maintenance, and necessary replacement on components. The Malfunction Preventive Abatement Plan is constantly being updated as components are inspected, maintained, and replaced. Therefore, a maintenance schedule in this update to the plan of operations will most likely become outdated and obsolete. Please refer to the most recent version of the Malfunction Preventive Abatement Plan for the WTE facility for the current maintenance schedule.

5.0 Waste and Waste Handling

The following sections describe the waste burned at the WTE Facility and how those wastes are handled.

5.1 Service Area, Population, and Facilities Served

The WTE Facility accepts wastes from the following geographic area, population base, and specific facilities. Data on waste collection area presented below is directly referenced from the report "Final Feasibility Study" by Ayres Associates and Burns & McDonnell – February 3, 2017 unless stated otherwise.

5.1.1 Service Area

The primary service area WTE facility waste capture was established as the following counties in Wisconsin:

- Barron
- Chippewa
- Dunn
- Polk
- St. Croix

Barron County has a waste flow control ordinance that directs solid waste produced in the county to the WTE facility. This ordinance is in effect for the entire county.

Additionally with the unique role that the WTE facility can play in solid waste management in the region (because of one of two MSW combustors in Wisconsin), waste does come from outside of the primary service area. Because of this, the secondary service area for the WTE facility extends up to 250 miles.

5.1.2 Population

The population section is copied verbatim from the "Final Feasibility Study" by Ayres Associates and Burns & McDonnell – February 3, 2017 as this document is public record and the underlying data has not changed since that document was produced. Edits to above referenced information are shown in [brackets].

Population Projections
Population projections for 2014 through 2040 were used as part of the analysis, as they represent the expected lifespan (25 years) of major equipment under the various operations scenarios for the MSWRS [WTE] facility. Service area populations were based on projections developed by the Wisconsin Department of Human Services and Wisconsin Department of Administration both indicate moderate growth is anticipated to occur. The largest growth is projected in Polk and St. Croix counties at 17% and 41%, respectively. The lowest growth within the service area is anticipated for Barron County at 8%. Overall the population within the service area is projected to grow by an average of 25% overall. See Table [5-1] for projected regional population growth by County.

Table 5-1 – Regional Population Projection by County

County	2010 [1]	2014 [2]	2020 [3]	2030 [3]	2040 [3]	% Growth
Barron	47,397	45,891	48,055	50,640	49,545	8%
Chippewa	61,828	63,349	66,155	69,400	70,600	13%
Dunn	43,549	44,168	46,440	47,970	48,485	11%
Polk	45,552	43,978	47,680	53,240	53,825	17%
St. Croix	81,056	86,223	96,985	111,470	119,010	41%
Total	**217,554**	**220,260**	**239,160**	**263,320**	**270,865**	**25%**

1 – Actual Census data
2 – Projection by Wisconsin Dept. of Human Services
3 – Projection by Wisconsin Dept. of Administration

Waste Generation by Population

The estimated MSW generation for the [primary WTE] service area was determined by multiplying the projected population for each County by the per capita disposal rate of 3.7 lb./capita/day. This estimate is the total available MSW produced or generated by each county. Table [5-2] summarizes regional MSW generation projections for the [primary WTE] service area.

Table 5-2 – Regional MSW Generation Projection by County

County	2010	2014	2020	2030	2040
	tons/year				
Barron	32,005	30,988	32,449	34,195	33,455
Chippewa	41,749	42,776	44,671	46,862	47,673
Dunn	29,406	29,824	31,359	32,392	32,739
Polk	30,759	29,696	32,196	35,950	36,345
St. Croix	54,733	58,222	65,489	75,270	80,362
Total	**188,653**	**191,507**	**206,164**	**224,669**	**230,574**

5.1.3 Facilities Served

Since January 1, 2018, the WTE facility has implemented a special waste profile, acceptance, and record keeping procedures. This system requires that new wastes are reviewed for compliance with types of wastes to be combusted and verifying that wastes are non-hazardous. Unique wastes may need to have analytical testing to prove contents are non-hazardous. It is the responsibility of the waste generator to prove the waste is non-hazardous. Ultimately WTE facility staff would give specific approval to allow combustion of specific wastes through this procedure. These procedures shall give the WTE facility staff a better way to track special, unique, and non-County sourced wastes. This procedure is planned to be used for all non-MSW waste. A copy of the current WTE special waste profile is included in Appendix D.

Within both the primary and secondary service areas, specific sources of waste are received by the WTE facility. These include industrial, institutional, and commercial sources. Details of non-MSW waste accepted from specific facilities are further described in Section 5.4 – Waste Screening Plan.

In addition the WTE facility has contracts with businesses to perform confidential burns. Confidential burns typically consist of office papers. The WTE facility also has contracts with many law enforcement agencies to burn evidence and both illegal and legal drugs (prescription drug take-back programs). Due to sensitivity of the sources of confidential burns, evidence, and drug combustion, these sources are not listed in this plan modification updating the Plan of Operations. Please contact the Facility Manager for details on these sources.

5.2 Types of Waste

The following are a list of waste materials allowed and prohibited for combustion at the WTE facility. See Section 6.0 for definitions of the specific wastes.

5.2.1 Allowed Wastes

Wastes that are allowed to be combusted at the WTE facility include, but not limited to;

- MSW
- Industrial, manufacturing, or process wastes that are not a hazardous waste
- Waste tires
    - Whole or shredded
- C&D
- Residential asphaltic shingles
- Yard wastes
    - Specifically resulting from a natural disaster
    - Brush and woody vegetation can be combusted from non-disaster sources only with prior Department approval

- The following wastes can be combusted if not a hazardous waste
    - Automotive shredder fluff (determined to be non-hazardous waste)
    - recycling operations residue (determined to be non-hazardous waste)
    - Used oil (convention and synthetic), oil filters, oil absorbent materials, and oil contaminated soils
        - In accordance with state and federal regulations
        - Oil filters and absorbent materials may not be visibly dripping with oil
    - Treated wood, including telephone poles and railroad ties
    - Paints, thinners, solvents, and other VOC paint shop wastes
    - Pharmaceutical wastes, including;
        - Residential and other small quantities of pharmaceuticals mixed with and disposed as household, commercial, or institutional waste
        - Bulk quantities of collected pharmaceuticals including expired or no longer necessary over the counter and prescription medications and controlled substances in the form of solid pills, capsules, liquids, and aerosols
        - Personal care products
        - Confiscated drugs by law enforcement agencies
    - Trace chemotherapy waste, and their containers and spill cleanup materials

The above list of accepted wastes are allowed by the WTE facility operational air permit, part I.C.2.a(1).

5.2.2 Special Waste Profiles

Since January 1, 2018, the WTE facility has implemented a special waste profile, acceptance, and record keeping procedures. This system requires that new wastes are reviewed for compliance with types of wastes to be combusted and verifying that wastes are non-hazardous. Unique wastes may need to have analytical testing to prove contents are non-hazardous. It is the responsibility of the waste generator to prove the waste is non-hazardous. Ultimately WTE facility staff would give specific approval to allow combustion of specific wastes through this procedure. These procedures shall give the WTE facility staff a better way to track special, unique, and non-County sourced wastes. This procedure is planned to be used for all non-MSW waste. A copy of the current WTE special waste profile is included in Appendix D.

5.2.2 Prohibited Wastes

Wastes that are specifically prohibited from combustion at the WTE facility include;

- major appliances
- large metal objects
- lead acid batteries
- alkaline batteries
    - note that alkaline batteries due to their small size and comingled disposal in MSW, inadvertent combustion of alkaline batteries may occur
- noncombustible furniture, office, and farm equipment
- asbestos containing materials (ACM)
- demolition waste determined to be hazardous waste
- hazardous wastes
- medical wastes
- infectious wastes
- antineoplastic chemotherapy drugs, and their containers and spill cleanup materials
- mercury containing items
- electronic wastes, such as;
    - cathode ray tubes and bulbs
    - fluorescent bulbs and lamps
    - computers
    - televisions

The above list of prohibited wastes are not allowed per the WTE facility operational air permit, part I.C.2.a(1)and/or NR 502.13(9)(b, c, d, e).

5.2.3 Over-Capacity Wastes

During times of excess waste delivered to the WTE facility, the excess waste is either transported to or directed to be transported to other solid waste facilities. The majority of the excess waste is transported by third-parties prior to arriving at the WTE facility. Third parties are free to choose where the diverted excess waste is disposed of. Excess of waste (over 100 TPD for multiple days – accounting for daily fluctuation) generally occurs during the summer months. On average, excess waste is encountered approximately 120 days per year.

5.3 Residuals Disposal

The WTE facility has an agreement with Republic Services Landfill license #3474, located near Sarona, Wisconsin for waste disposal, including ultimate disposal for ash, residuals, and undesirable wastes. As part of the design and plan of operations for the Republic Services Landfill, there is a dedicated area within the landfill for ash and unburned materials. This area is designed, managed, and operated as an ash monofill. The County has an agreement with Republic Services Landfill for residuals disposal. This agreement is a special waste agreement, waste profile #5134Y39490. A copy of this agreement is included in Appendix C. The County does not have an approved second location for ash disposal. Two additional MSW landfill site that are approved for and accept MSW combustor ash is SKB/Waste Connections near Rosemount, Minnesota or La Crosse County Landfill in Onalaska, WI.

5.3.1 Ash and Unburned Waste

Ash and unburned waste resulting from the combustion of wastes are temporarily stored within the WTE facility in the ash handling portion of the building. Unburned wastes usually consist of metals, glass, concrete, brick, soil, and other non-combustible material that has been sent through the combustion train.

The WTE facility does have the equipment and ability to collect ferrous metals from the ash and unburned waste stream. Depending upon ferrous metal scrap and recycling markets, the WTE facility may or may not separate ferrous metals for recycling.

After proper ash handling and conditioning the combined ash and unburned waste materials are transported to the ash monofill area of the Republic Services Landfill for ultimate disposal. Currently the WTE facility has its own semi-truck and trailer to haul ash and other unburned wastes. This truck and trailer is licensed with the Department to haul these wastes. The trailer used to haul ash and other unburned waste does have tailgate seals which prevent leakage during transportation. The seals and tailgate are routinely checked and maintained to prevent leakage.

Ash Sampling

The facility staff routinely samples ash and unburned waste following regulatory requirements and with the special waste agreement profiling with Republic Services, if any. Ash and unburned waste (combined fly ash, bottom ash, and pollution control material) is collected over a one-week period a minimum of once annually (usually June). See Appendix E for a copy of the current “Incinerator Bottom Ash Sampling Procedure.” Note that the facility staff worked jointly with WDNR staff in developing this sampling procedure.

Ash Analysis

The facility has the ash and unburned waste samples described above analytically tested at a certified laboratory using TCLP methods for the parameters and physical characteristics listed in NR 502.13(6) Table 1. In addition to these parameters, the facility performs analytical testing on parameters required by the facility’s air permit and requirements of the special waste acceptance by Republic Services, if any. The specific parameters that are tested for are included in a request for analytical testing, included in Appendix F.

5.3.2 Liquid Waste

There are two types of liquid waste produced by the WTE facility. These two liquids is human produced waste water from building lavatory facilities and process waste water.

The human waste water is collected from building plumbing into a County permitted septic tank. This septic tank is periodically inspected, pumped and transported by a licensed septic hauler as necessary for disposal at a licensed waste water treatment system. The septic tank is a holding tank with no drain field.

The process waste water consists of dirty water from various plant functions (i.e. cleaning, boiler blowdown, leachate from tipping floor) and sent to the Plant bilge located in the bottom floor of the WTE facility. That water is utilized for ash quenching in the quench tanks. The ash is dewatered as it is conditioned in the ash handling area. Ultimately all dirty process water, including liquid dewatered from the ash conditioning is mixed with ash and hauled to the Republic Services Landfill for disposal. There is means to pump process waste water from the quench tank to the septic tank. Historically the pump to septic option is rarely used.

5.3.3 Undesirable Waste

For the purpose of residuals disposal, undesirable waste is either prohibited waste (as defined in Section 5.2.2), waste that adversely affects the combustion operation or emissions control systems (such as concrete or gypsum based drywall), or general waste volumes over the 100 TPD maximum burn capacity. All undesirable wastes are disposed of with traditional MSW waste at the Republic Services Landfill. Undesirable wastes are either directly disposed of by waste customers or hauled by the County after screening out undesirable wastes from general waste. As described in Section 5.5.4, the County maintains waste vehicles permitted for hauling residual materials for disposal. Hazardous wastes are not accepted by the WTE facility.

5.4 Waste Screening Plan

All wastes that are disposed of through the WTE facility combustors are subject to screening in accordance with the parameters of this Waste Screening Plan (Section 5.4). Because the facility is operated 24 hours, 7 days per week and requires constant waste charging into the combustors, there is always a facility operator on the tipping floor or near the combustor charging chutes. Additionally, the facility uses closed-circuit televisions camera's at the facility scale to assist in monitoring incoming loads for conformance with the Waste Screening Plan.

5.4.1 Prohibited Wastes

Wastes that are specifically prohibited from combustion at the WTE facility include:

- major appliances
- large metal objects
- lead acid batteries
- alkaline batteries
    - note that alkaline batteries due to their small size and comingled disposal in MSW, inadvertent combustion of alkaline batteries may occur
- noncombustible furniture, office, and farm equipment
- asbestos containing materials (ACM)
- demolition waste determined to be hazardous waste

- hazardous wastes
- medical wastes
- infectious wastes
- antineoplastic chemotherapy drugs, and their containers and spill cleanup materials
- mercury containing items
- electronic wastes, such as;
    - cathode ray tubes and bulbs
    - fluorescent bulbs and lamps
    - computers
    - televisions

Prohibited wastes, if encountered on the tipping floor, are removed from the waste storage and placed into appropriate containers for proper disposal or recycling. WTE facility are regularly instructed on prohibited wastes and proper procedures for handling prohibited wastes. If prohibited wastes are encountered while the vehicle is dumping wastes, WTE facility personnel notify the driver of the prohibited wastes.

WTE facility management personnel do produce educational materials to distribute to waste haulers and County residents identifying both allowed and prohibited wastes as a means to reduce the amount of prohibited wastes from reaching the tipping floor. Additionally, the inclusion of the County operated recycling MRF on the same property allows for the WTE facility to take prohibited wastes for proper disposal outside of the combustor operation. Such items include major appliances and lead-acid batteries.

5.4.2 Undesirable Waste

Undesirable wastes include waste materials that are allowed to be combusted but the WTE facility does not allow for these materials to be combusted because they adversely affect the efficiency or emissions of the combustors. The following materials are not allowed to the extend practicable to be combusted by the WTE facility based on undesirable combustion characteristics:

- drywall
    - gypsum based wallboard
- plastic films (such as shrink wrap, boat wrap, or agricultural plastic)
- mattresses, box springs
- large furniture
- non-burnable C&D wastes
- concrete, brick, plaster
- tree stumps
- compressed gas cylinders (CGC)
    - larger than 1 pound capacity (such as propane, freon, or welding gas)

Undesired wastes, when encountered on the tipping floor, are removed from the waste storage and placed into appropriate containers for proper disposal or recycling. WTE facility are regularly instructed on undesirable wastes and proper procedures for handling these wastes. If undesired wastes are encountered while the vehicle is dumping wastes, WTE facility personnel notify the driver of the undesired wastes. WTE facility staff does have guidance documents for proper disposal of undesirable waste.

5.4.3 Contaminated Soils

Contaminated soils are permitted to be combusted at the WTE facility if determined to be non-hazardous. Contaminated soils, due to their non-combustible nature, must be mixed with MSW to promote a consistent burn. Contaminated soils are only allowed with advanced notice to facility staff and are stockpiled separately on the tipping floor for periodic inclusion into the combustor.

5.4.4 Tires

All rubber based tires are allowed for combustion at the WTE facility. Tires are allowed to be intermixed with MSW or in dedicated loads. If received in dedicated loads, these loads are dumped on the tipping floor and mixed into the regular MSW wastes. At no time is a dedicated load of only tires placed into the combustors.

5.4.5 Waste Screening Authority

The primary means for enforcing the rejection of prohibited or undesirable wastes is through individual contracts with waste hauling companies. For the general public that use the WTE facility and also for the haulers, the practical means for handling these wastes is that there is alternate disposal means available for most of these materials. Such as segregated drywall intended for recycling, the materials accepted by the adjacent County operated MRF (for major appliances), or separate containers for large furniture or mattresses that are then directly hauled to the landfill. The WTE facility does reserve the right to reject any load of waste and require that the waste hauler properly dispose of those rejected materials. WTE facility staff does have guidance documents for proper disposal of undesirable waste and these guidance documents have been given to the general public using the facilities directing them to properly disposal through either recycling, landfilling, or treating and disposal as hazardous waste.

5.5 Waste Handling

Generally all waste entering the WTE facility travels through the same general process. That process is weighing on the site's scale, dumping on the tipping floor, being placed into the combustor, and coming out as ash or other residual wastes. The sections below detail each process.

5.5.1 Traffic Flow and Control

All traffic coming to the WTE facility for purposes of waste disposal enters the site scale off of 10 ½ Avenue. Traffic control is obtained through access to the scale. For instance, if traffic is busy then vehicles are held on the scale until instructed by the scale clerk to proceed. This blocks any additional incoming traffic from entering the facility.

Traffic flows around the WTE facility buildings, starting at the facility scale, in a counter-clockwise motion. After the scale, vehicles dump at the tipping floor. After dumping on the tipping floor, they continue in a counter-clockwise motion and either leave the facility or enter the scale area again for empty weighing. Weighed empty trucks exit the scale in the same counter-clockwise manner. Other vehicular traffic at the facility, including recycling MRF traffic, incoming lime delivery, or outgoing ash disposal all follow the scale first – counter-clockwise traffic flow around the WTE facility buildings.

5.5.2 Weighing

All waste that comes to the WTE facility is required to be weighed. The WTE facility has an above grade scale at the entrance to the facility near the public road. This scale was installed in November 2017. The above grade scale replaced the facilities original surface scale in the same location. While weighing, the

scale clerk asks the driver what type of waste is in the load and can verify the contents with closed-circuit cameras. The scale clerk then directs the customer as to where (which side of tipping floor) to proceed to dump.

5.5.2 Tipping Floor

All wastes are dumped and stored inside the building on the enclosed tipping floor. All waste sorting and handling is performed indoors. As the waste is brought to the WTE facility, wastes are stored on one side of the tipping floor while wastes on the other side of the tipping floor are fed into the combustors. Waste is completely removed from each side prior to storing more waste on that side. With this operation, wastes are not normally stored on the tipping floor for more than three consecutive days.

5.5.3 Waste Sorting and Handling

As wastes are received from each customer and in between combustor charging, the WTE facility personnel sort wastes according to the waste screening plan, waste type, and ultimately the waste's characteristics as fuel. Wastes are sorted using mechanical means, usually a front-end loader, or by hand to remove prohibited wastes or undesired wastes. During this time, waste is stored and stockpiled for overnight or over weekend operation when incoming new waste is slow or nonexistent. Proper and efficient operation of the combustor is very dependent upon the quality and consistency of fuel which makes the waste sorting and handling an important process and technique for the facility.

5.5.4 Combustor Charging

During typical operations, a new load of waste is placed into the charging chutes approximately once every 8-10 minutes. Wastes are normally placed into the charging chute with a front-end loader. The exception to this is confidential burns, pharmaceuticals, illegal drugs, or evidence which is placed in the charging chute by hand.

5.5.4 Residuals

Residuals, including prohibited wastes and undesirable wastes are removed from the tipping floor and placed into containers (usually roll-off style dumpsters) located outside but near the tipping floor area for proper disposal or recycling.

6.0 Definitions and Acronyms

ACFM	actual cubic feet per minute
ACM	asbestos containing material
Asbestos	as defined by NR 500.03(12) “means any material which contains fibrous chrysotile, crocidolite, amosite materials or the fibrous varieties of anthopyllite, tremolite, and actinolite”
BSTG	backpressure steam turbine generator
building materials	as defined by NR 500.03(21) “non-combustible construction material including brick, concrete, and drywall”
C&D	Construction and Demolition waste – as defined by NR 500.03(50) “solid waste resulting from the construction, demolition, or razing of buildings, roads, and other structures” noted to typically consist of concrete, bricks, bituminous concrete, wood, glass, masonry, roofing, siding and plaster, along or in combinations, but not including waste paints, solvents, sealers, adhesives, or similar materials
CGC	compressed gas cylinder
Commercial solid waste	as defined by NR 500.03(41) “means all types of solid waste generated by stores, offices, restaurants, warehouses, and other non–manufacturing activities, excluding residential and industrial wastes”
County	Barron County, Wisconsin
CSTG	condensing steam turbine generator
Design capacity for a facility that burns MSW	as defined by NR 500.03(59) “means the facility’s rated capacity or any permit limitations, whichever is less, for burning municipal solid waste”
Department	Wisconsin Department of Natural Resources
DSPS	Wisconsin Department of Safety and Professional Services
Hazardous waste	as defined by 40 CFR §63.1201, §261.3, and NR 661.03
Industrial waste	as defined by NR 500.03(109) “means solid waste generated by manufacturing or industrial processes that is not a hazardous waste regulated under chs. NR 660 to 679. Industrial waste may include, but is not limited to, waste resulting from the following manufacturing processes; electric power generation; fertilizer and agricultural chemicals; food and related products and by–products; inorganic chemicals; iron and steel manufacturing; leather and leather products; nonferrous metals manufacturing and foundries; organic chemicals; plastics and resins manufacturing; pulp and paper industry; rubber and miscellaneous plastic products; stone, glass, clay, and concrete products; textile manufacturing; transportation equipment; and water treatment. This term does not include mining waste or oil and gas waste”

Infectious waste	as defined by NR 500.03(110) “has the meaning given in §287.07(7)(c)(1)(c)” which “means solid waste that contains pathogens with sufficient virulence and in sufficient quantity that exposure of a susceptible human or animal to the solid waste could cause the human or animal to contract an infectious disease”
Medical waste	as defined by NR 500.03(143) “has the meaning given in §299.51(1)(b)” which states “infectious waste, as defined in §287.07(7)(c)(1)(c), and other waste that contains or may be mixed with infectious waste”
MRF	Material Recovery Facility – as defined by NR 500.03(140) and §287.27(1) “a facility where the materials specified in sub. (4)(b) or §287.07(3)or(4) not mixed with other solid waste, are processed for reuse or recycling by conversion into a consumer product or a product which is used as a raw material in a commercial or industrial process.”
MSW	Municipal Solid Waste – as defined by 40 CFR §62.15410 and NR 500.03(150) which states: “(a) household waste or (b) solid waste from commercial or industrial sources that does not contain hazardous waste and does not contain any process waste which is the director or indirect result of the manufacturing of a product or the performance of a service such as dry cleaning or paint shops.”
MSW combustor	as defined by NR 500.03(151) which states: “any solid waste treatment facility that is used to burn municipal solid waste or products derived from municipal solid waste, alone or in conjunction with other materials.”
MSWRS	Municipal Solid Waste Recovery System
Noncombustible materials	as defined by NR 500.03(153) “means solid waste which will not support combustion in the ambient atmosphere”
NR	Wisconsin Administrative Code series NR (Natural Resources)
Operator	as defined by NR 500.03(161) “means the person who is responsible for the overall operation of a solid waste facility, or for part of a solid waste facility”
Private water supply well	as defined by NR 500.03(180) “is part of a public water supply system as defined in NR 812.07(78).
Public water supply well	as defined by NR 500.03(183) “is part of a public water supply system as defined in NR 812.07(80).
Refuse	as defined by NR 500.03(193) “has the meaning specified in §289.01(28);” which “means all matters produced from industrial or community life, subject to decomposition, not defined as sewage”
§	State Statute
Sharps	as defined by NR 500.03(209) “means medical equipment or clinical laboratory articles that may cause punctures or cuts, includes but not limited contaminated, unused, and disinfected items listed in NR 526.05(1)(a);” which states “… including but not limited to: hypodermic needles, syringes with needles attached, scalpel blades, lancets, broken glass vials, broken rigid plastic vials and laboratory slides”

Solid Waste	as defined by NR 500.03(215) “has the meaning specified in §289.01(33);” which “means any garbage, refuse, sludge from a waste treatment plant, water supply treatment plant or air pollution control facility and other discarded or salvageable materials, including solid, liquid, semisolid, or contained gaseous materials resulting from industrial, commercial, mining and agricultural operations, and from community activities, but does not include solids or dissolved material in domestic sewage, or solid or dissolved materials in irrigation return flows or industrial discharges which are point sources subject to permits under ch. 283, or source material, as defined in §254.31(10), special nuclear material, as defined in §254.31(11), or by-product material, as defined in §254.31(1)”
§	State Statute
TPD	Tons per day
Trace chemotherapy waste	as defined by NR 500.03(237m) “means items contaminated with antineoplastic chemotherapy drugs, including drug dispensing devices, gloves and other items that have come into contact with chemotherapy drugs”
WTE	Waste-to-Energy

7.0 Amendments

This plan submittal updating the Plan of Operations is intended to be a reference for both operations staff and regulators. As such, this document may be amended or modified from time to time. This section is intended to be a place holder for such amendments or modifications.

Appendix A

Drawings

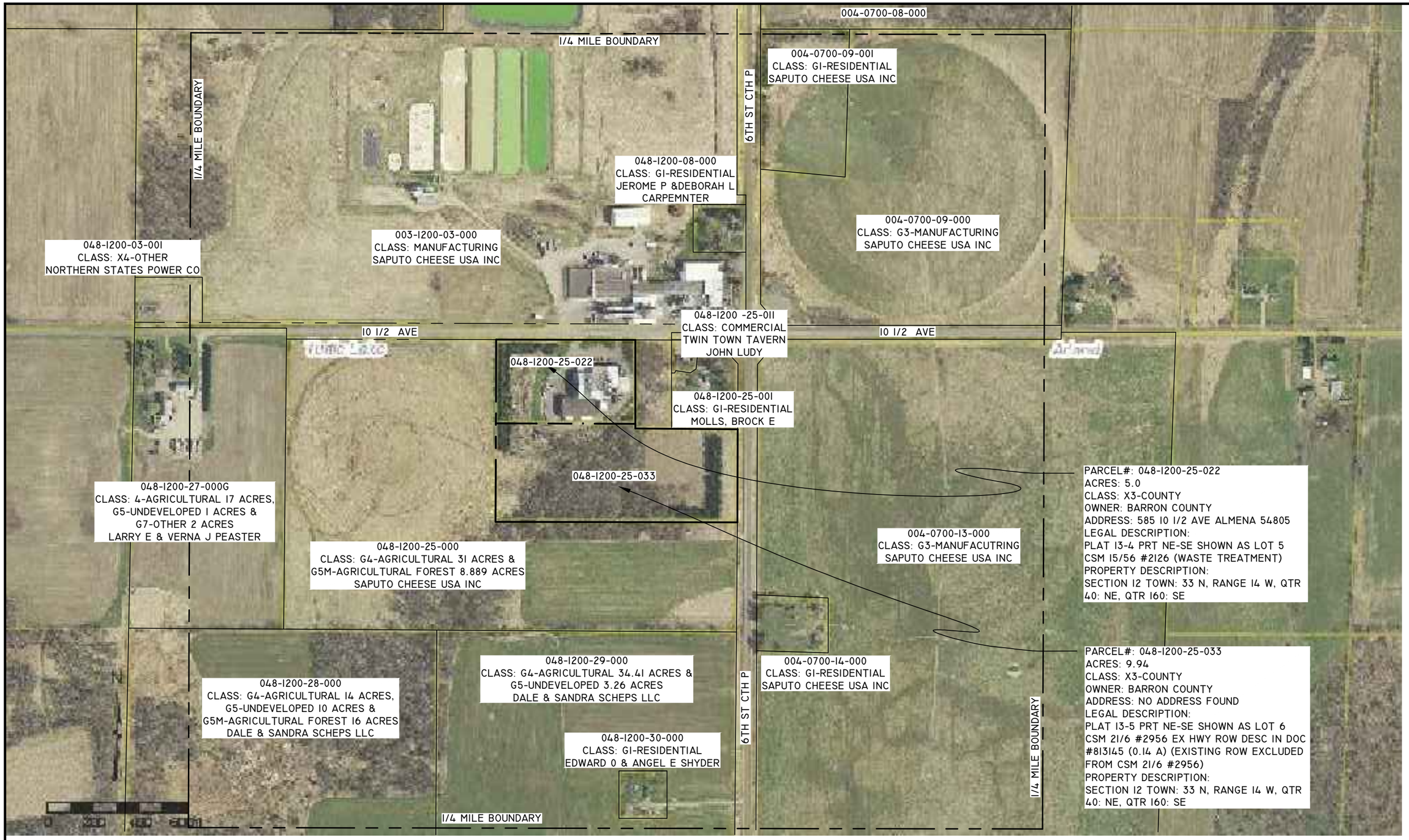

REV	DESCRIPTION OF REVISION	BY	DATE	APPROVED
A	*	*	*	*

Scale in Feet - 1" = 400'

11 x 17 SHEET SCALE

0 1"

NOTE:
IF THIS BAR DOES NOT MEASURE 1" THEN DRAWING IS AT DOUBLE SCALE OR NOT TO SCALE

THIS DRAWING IS THE PROPERTY OF OAKRIDGE ENGINEERING, INC. IT IS NOT TO BE LOANED, COPIED OR DUPLICATED IN ANY MANNER WITHOUT THE PERMISSION OF OAKRIDGE ENGINEERING, INC.

File: *\\OAKRIDGE1\Projects\Solid Waste\Barron County WTE\AutoCAD\D2_P1.dwg* - **Saved:** *Duane 8/8/2018 3:50 PM* - **Printed:** *Dberlin 8/8/2018 4:13 PM*

Oakridge ENGINEERING
Chippewa Falls, WI 54729
www.OakridgeEng.com

PROJECT NO.: BWTE-01-17
DESIGNED: ETL
DRAWN: DGB
PROJECT MANAGER: ETL

SITE MAP

BARRON CO. WASTE TO ENERGY

CONTROL NO.: D2_P1
DATE: 8/8/2018
ORIGINAL DATE: 8/8/2018
SHEET: 1 OF 3

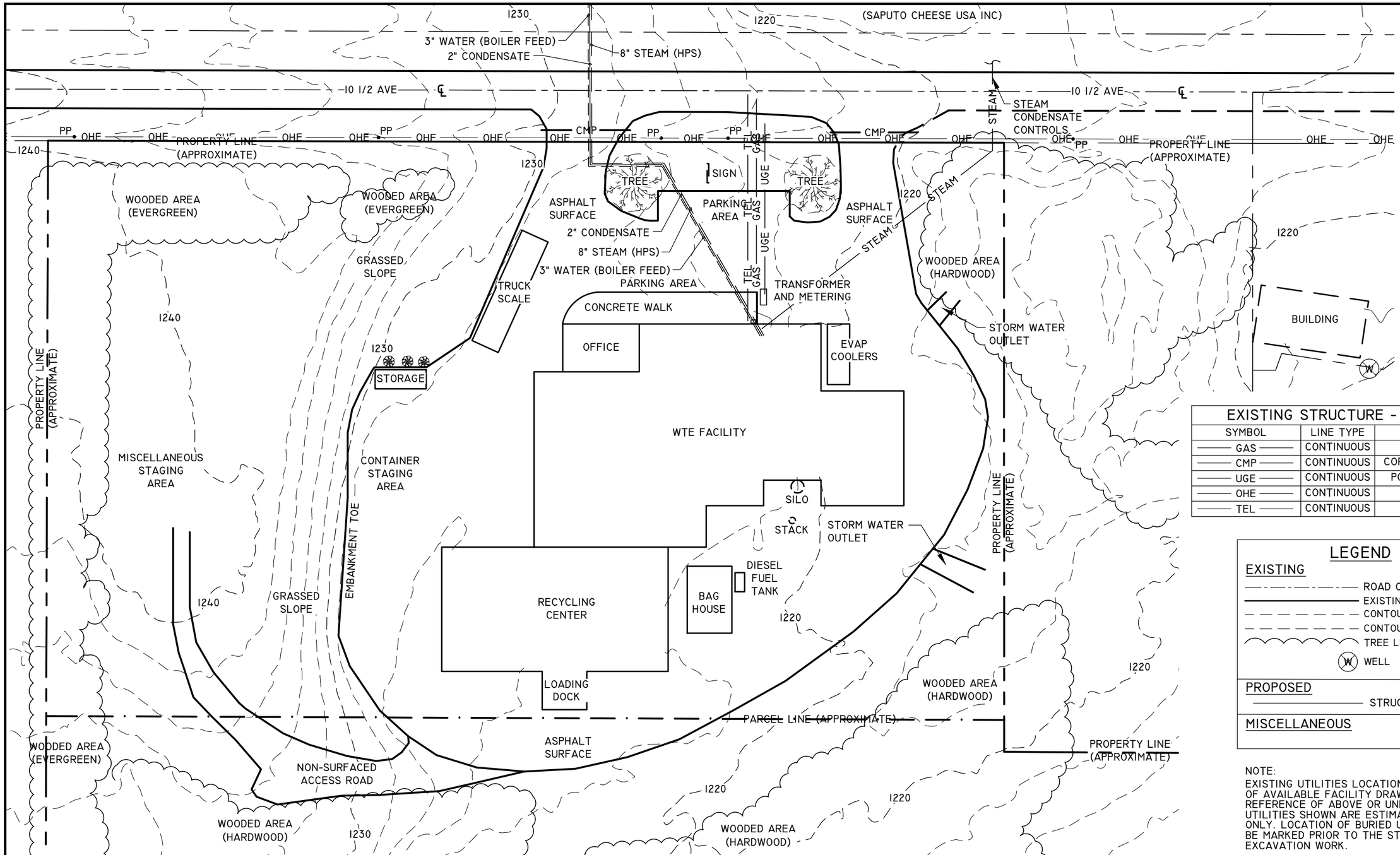

EXISTING STRUCTURE - LINE TYPES		
SYMBOL	LINE TYPE	DESCRIPTION
GAS	CONTINUOUS	GAS
CMP	CONTINUOUS	CORRUGATED METAL PIPE
UGE	CONTINUOUS	POWER UNDERGROUND
OHE	CONTINUOUS	POWER OVERHEAD
TEL	CONTINUOUS	PHONE/INTERNET

LEGEND

EXISTING

- ROAD OR DRIVEWAY ℄
- EXISTING STRUCTURE
- CONTOUR MINOR
- CONTOUR MAJOR
- TREE LINE
- WELL

PROPOSED

- STRUCTURE

MISCELLANEOUS

NOTE:
EXISTING UTILITIES LOCATIONS ARE BASED OF AVAILABLE FACILITY DRAWINGS. ANY REFERENCE OF ABOVE OR UNDERGROUND UTILITIES SHOWN ARE ESTIMATE LOCATIONS ONLY. LOCATION OF BURIED UTILITIES MUST BE MARKED PRIOR TO THE START OF EXCAVATION WORK.

REV	DESCRIPTION OF REVISION	BY	DATE	APPROVED
A	*	*	*	*

Scale in Feet - 1" = 60'
11 x 17 SHEET SCALE
0 1"

NOTE:
IF THIS BAR DOES NOT MEASURE 1" THEN DRAWING IS AT DOUBLE SCALE OR NOT TO SCALE

THIS DRAWING IS THE PROPERTY OF OAKRIDGE ENGINEERING, INC. IT IS NOT TO BE LOANED, COPIED OR DUPLICATED IN ANY MANNER WITHOUT THE PERMISSION OF OAKRIDGE ENGINEERING, INC.

Oakridge ENGINEERING
Chippewa Falls, WI 54729
www.OakridgeEng.com

PROJECT NO.: BWTE-01-17
DESIGNED: ETL
DRAWN: DGB
PROJECT MANAGER: ETL

EXISTING SITE PLAN

BARRON CO. WASTE TO ENERGY

CONTROL NO.: D2_P1
DATE: 8/8/2018
ORIGINAL DATE: 8/8/2018
SHEET: 2 OF 3

File: *\\OAKRIDGE1\Projects\Solid Waste\Barron County WTE\AutoCAD\D2_P1.dwg* - **Saved:** *Duane 8/8/2018 3:50 PM* - **Printed:** *Dberlin 8/8/2018 4:15 PM*

EXISTING STRUCTURE - LINE TYPES		
SYMBOL	LINE TYPE	DESCRIPTION
GAS	CONTINUOUS	GAS
CMP	CONTINUOUS	CORRUGATED METAL PIPE
UGE	CONTINUOUS	POWER UNDERGROUND
OHE	CONTINUOUS	POWER OVERHEAD
TEL	CONTINUOUS	PHONE/INTERNET

LEGEND

EXISTING

- ROAD OR DRIVEWAY ℄
- EXISTING STRUCTURE
- CONTOUR MINOR
- CONTOUR MAJOR
- TREE LINE

PROPOSED

- STRUCTURE

MISCELLANEOUS

NOTE:
EXISTING UTILITIES LOCATIONS ARE BASED OF AVAILABLE FACILITY DRAWINGS. ANY REFERENCE OF ABOVE OR UNDERGROUND UTILITIES SHOWN ARE ESTIMATE LOCATIONS ONLY. LOCATION OF BURIED UTILITIES MUST BE MARKED PRIOR TO THE START OF EXCAVATION WORK.

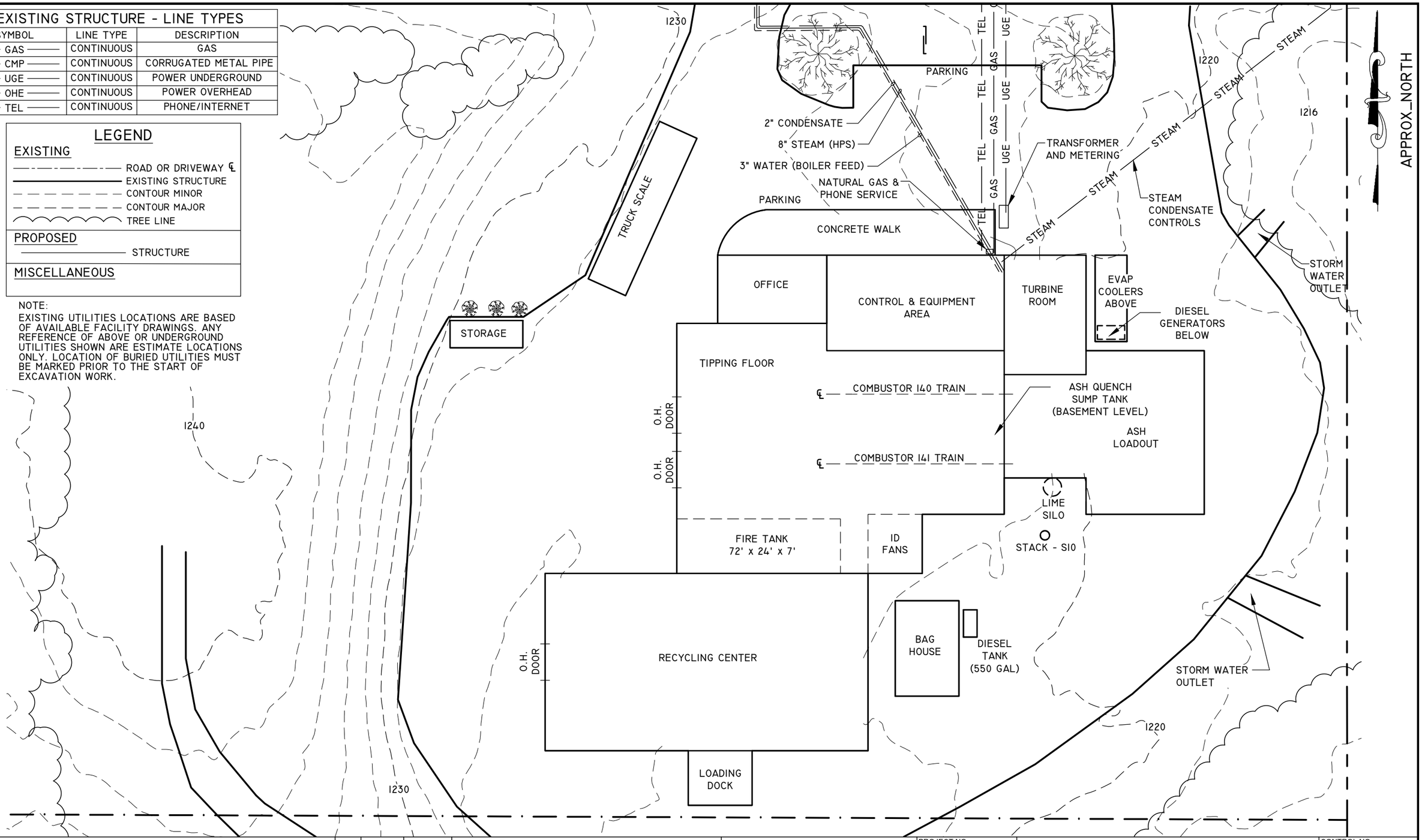

REV	DESCRIPTION OF REVISION	BY	DATE	APPROVED
A	*	*	*	*

Scale in Feet - 1" = 40'
11 x 17 SHEET SCALE 0 1"

NOTE:
IF THIS BAR DOES NOT MEASURE 1" THEN DRAWING IS AT DOUBLE SCALE OR NOT TO SCALE

THIS DRAWING IS THE PROPERTY OF OAKRIDGE ENGINEERING, INC. IT IS NOT TO BE LOANED, COPIED OR DUPLICATED IN ANY MANNER WITHOUT THE PERMISSION OF OAKRIDGE ENGINEERING, INC.

Oakridge ENGINEERING
Chippewa Falls, WI 54729
www.OakridgeEng.com

PROJECT NO.: BWTE-01-17
DESIGNED: ETL
DRAWN: DGB
PROJECT MANAGER: ETL

EXISTING BUILDING PLAN

BARRON CO. WASTE TO ENERGY

CONTROL NO.: D2_P1
DATE: 8/8/2018
ORIGINAL DATE: 8/8/2018
SHEET: 3 OF 3

File: *\\OAKRIDGE1\Projects\Solid Waste\Barron County WTE\AutoCAD\D2_P1.dwg* - **Saved:** *Duane 8/8/2018 3:50 PM* - **Printed:** *Dberlin 8/8/2018 4:16 PM*

Appendix B

WTE Facility Process Flow Diagram

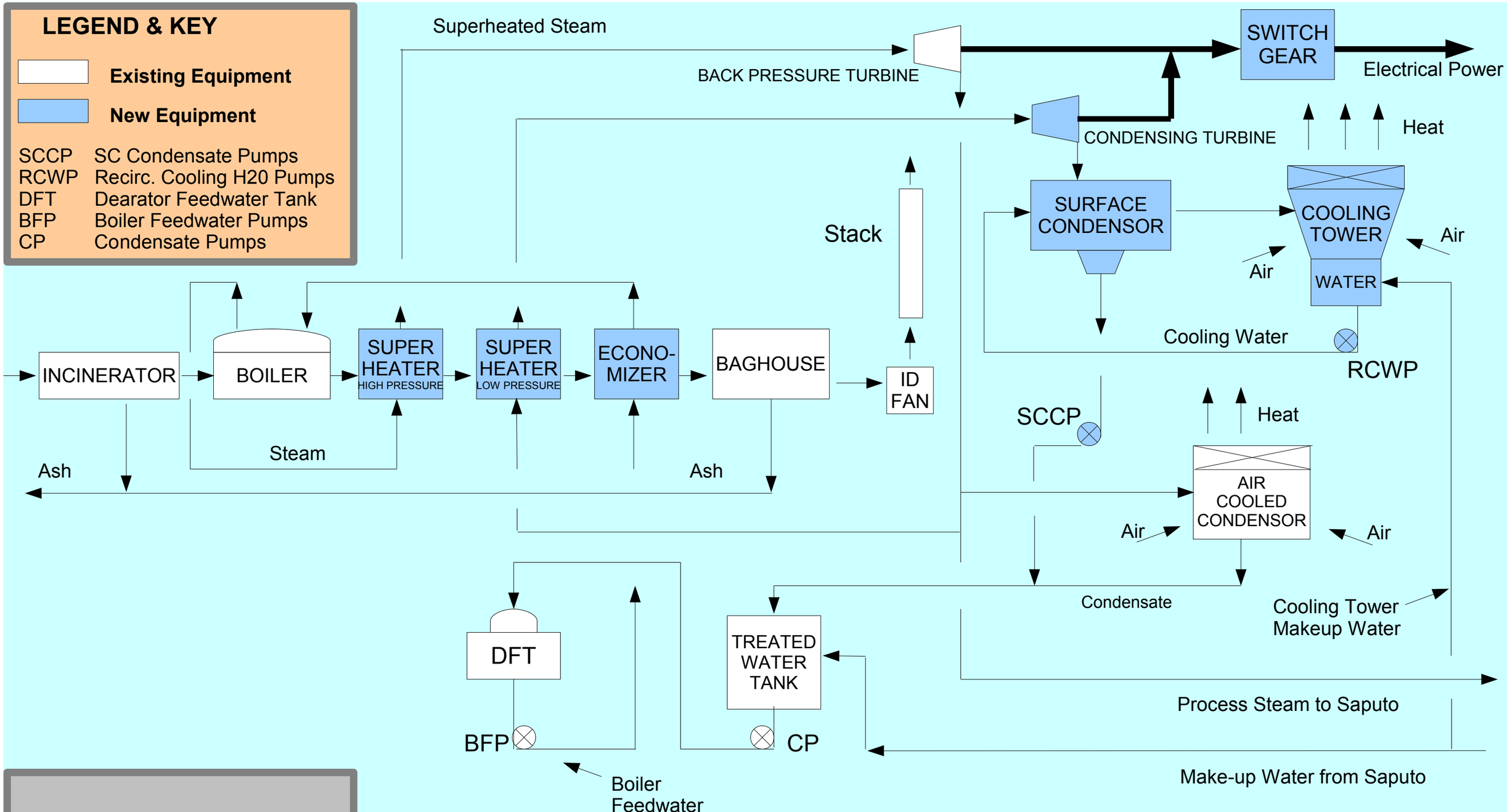

Barron County Waste-to-Energy

October 2008

Condensing Steam Turbine Flow Diagram

Appendix C

Ash Disposal Agreement

REPUBLIC SERVICES, INC.

Republic Services, Inc.

18500 N. Allied Way, Phoenix, AZ 85054

SPECIAL WASTE DEPARTMENT DECISION

	Waste Profile # 5134Y39490	Expiration Date 9/30/2018
I. Decision Request:	☐ Initial ☑ Recertification ☐ Change	

Disposal Facility: 5134 - AW -Lad Landfill

Generator Name: Barron County

Generator Site Address:

City: Almena	**County:**	**State:** WI	**Zip:**

Name of Waste: MSW Combustor Bottom Ash

Estimated Annual Volume: 14,500 Tons

II. Special Waste Department Decision: ☑ Approved ☐ Rejected

Management Method(s): ☑ Landfill ☐ Solidification ☐ Bioremediation ☐ Transfer Facility

Problematic Special Waste according to Republic? ☐ Yes ☑ No

If yes, which one?

Approved by Special Waste Review Committee? ☐ Yes ☐ No ☑ Not Applicable

Precautions, Conditions or Limitations on Approval

Dusty/Powdery Material: Waste must be shipped in a manner that minimizes fugitive dust emissions.
Proper PPE must be worn when handling this material.

Special Waste Analyst Signature: MC Phillips **Name (Printed):** MARK PHILLIPS
Date: 8/22/2017

III. Facility Decision: ☑ Approved ☐ Rejected

Precautions, Conditions or Limitations on Approval

By signing below, the General Manager or Designee agrees that a fully executed Special Waste Service Agreement is on file for this profile and that the special waste file is complete.

General Manager or Designee: Jon Snyder **Name (Printed):** Jon Snyder
Date: 8/22/2017

Appendix D

Special Waste Profile

Barron County
Waste to Energy

585 10 ½ Ave
Almena, WI 54805
Phone: 715-357-6566
Fax: 715-357-3006
wastetoenergy@co.barron.wi.us

SPECIAL WASTE PROFILE

SECTION 1 – WASTE GENERATOR INFORMATION

Company Name: _____

Address: _____

City: _____ State: _____ Zip: _____

Phone: _____ Email: _____

Contact Person: _____ Title: _____

Email: _____ Phone: _____

Address waste will be coming from (if different than above):

_____

City: _____ State: _____ Zip: _____

Federal EPA Number: _____

BILLING INFORMATION

Billing Address: _____

City: _____ State: _____ Zip: _____

Special Instructions:

_____

_____

_____

SECTION 2 – WASTE DESCRIPTION

1.) Waste Material Name: _____
2.) Waste Material Description: _____

_____

_____

_____

3.) Brief Description of Process Generating Waste: _____

_____

_____

_____

_____

_____

4.) Estimated Volume: _____ ☐Tons ☐Pounds ☐Cubic Yards ☐Other:_____

5.) Frequency of Disposal: _____

Per ☐Year ☐Month ☐Week ☐Day ☐Other: _____

WASTE INFORMATION

1.) Is this a "Hazardous Waste" as defined by Federal or State Regulations? ☐Yes ☐No

If YES, enter the Waste Identification Number: _____

2.) Is this a treatment residue of a waste that was previously a hazardous waste? ☐Yes ☐No

If YES, describe the waste and the process generating the waste prior to treatment: _____

_____

_____

_____

_____

3.) Recommended personal protective equipment and special handling procedures: _____

_____

4.) Will your driver/designee need to witness the destruction of the waste materials? ☐Yes ☐No

5.) Will you require a Certificate of Destruction for each load brought in? ☐Yes ☐No

---

SECTION 3 – WASTE PROPERTIES AT 72° F

1.) Physical State of Waste:

☐Solid ☐Liquid ☐Powder ☐ Semi-Solid ☐Combination ☐ Other: _____

2.) Density Range: _____ to _____ ☐N/D ☐lbs/gal ☐g./cc. ☐lbs/yd^3 ☐Kg/m^3 ☐Other:

3.) Flash Point (in °F): ☐≤ 72 ☐ 73-100 ☐101-140 ☐ 141-200 ☐≥ 201 ☐N/A ☐N/D

4.) pH: ☐≤ 2 ☐ 2.1-5.0 ☐ 5.1-9.0 ☐9.1-12.4 ☐≥ 12.5 ☐ N/A ☐ N/D

1.) REACTIVITY - Note if Waste Material exhibits one or more of the following properties:

☐Water Reactive ☐Acid Reactive ☐Alkaline Reactive ☐Oxidizer ☐Autopolymerizable ☐Pyrophoric ☐Explosive ☐Thermally Sensitive ☐Shock Sensitive ☐None of the Above

2.) Does Waste Material contain any of the following:

☐Free Liquids ☐Free Cyanide ☐Free Sulfide ☐Free Ammonia ☐Dioxin/Furan/PCP ☐Organic Solvents ☐Virgin Oils ☐Used Oils ☐OSHA Substances ☐Etiological Agents ☐Pathogens ☐Biological Materials ☐Radioactive Materials ☐PCBs not regulated by TSCA 40 CFR 761 ☐None of the Above

---

SECTION 4 – GENERATOR CERTIFICATION

By signing this profile form, I hereby certify that all information submitted in this and all attached documents contain true and accurate descriptions of this waste, and that all relevant information necessary for proper waste characterization and to identify known and suspected hazards has been provided. Any analytical data attached was derived from a sample that is representative as defined in 40 CFR 261 – Appendix 1, or by using an equivalent method. All changes occurring in the character of the waste (i.e. changes in the process or new analytical) will be identified by the Generator prior to delivery of the waste to Barron County Waste to Energy.

If I am an agent signing on behalf of the Generator, I have confirmed with the Generator that information contained in this profile is accurate and complete.

Name (print): _____

Title: _____

Date: _____

Company Name: _____

Certification Signature: _____

Appendix E

Incinerator Bottom Ash Sampling Proceedure

Barron County
Waste to Energy

Ray Zeman, Plant Manager
Brent Bohn, Assistant Plant Manager

585 10 ½ Ave
Almena, WI 54805
Phone: 715-357-6566
Fax: 715-357-3006
wastetoenergy@co.barro

INCINERATOR BOTTON ASH SAMPLING PROCEDURE

- When taking ash sample:
  Insert shovel at base of pile and lift toward the top of the pile, getting a sample representative of the whole pile. Take 1 shovel full from the pile under #1 conveyor and the other shovel full from the pile under #2 conveyor.

- Place two shovelfuls of ash from under drag chain conveyors into mixer every four hours starting at 0800 on _____

  - 0800 Daily Composite:
    Mix 12 shovelfuls in mixer for 3 minutes. Discard 6 shovelfuls and save the other 6 shovelfuls in weekly composite barrel.
  - 0800 7 day Composite:_____
    Mix 42 shovelfuls from weekly composite barrel in mixer for 3 minutes. Discard ¾ of the sample and mix the remaining ¼ for another 3 minutes. Save this ¼ for the weekly sample. Fill the provided (2) containers with the weekly sample.

Appendix F

Bottom Ash Request for Analytical Testing

Barron County Waste to Energy

Ray Zeman, Plant Manager
Brent Bohn, Assistant Plant Manager

585 10 ½ Ave
Almena, WI 54805
Phone: 715-357-6566
Fax: 715-357-3006
wastetoenergy@co.barro

07/09/2018

Interpoll Laboratories

4500 Ball road N.E.

Circle pines, MN. 55014-1819

Attn: Gregg Holman

Re: Annual Incinerator Ash Testing, Barron County Waste to energy facility

Gentlemen:

Please provide the following test:

1) Bulk chemical analysis for (detection limits in mg/kg)

Aluminum	0.1
Antimony	1.0
Arsenic	0.005
Barium	0.02
Cadmium	0.001
Calcium	1.0
Chloride	1.0
Chromium, total	0.005
Fluoride	0.1
Iron	0.1
Lead	0.005
Manganese	0.02
Mercury	0.002
Potassium	0.01
Selenium	0.001
Silver	0.01
Sodium	1.0

Sulfate (SO4)	1.0
Zinc	2.0
Total organic carbon	1.0
Extractable Organic Halogen (EOX)	0.25

2). Toxicity Characteristic Leaching Procedure test (TCLP) – EPA method 1311 for(detection limits in mg/1)

Arsenic	0.005
Barium	0.02
Cadmium	0.001
Chromium, total	0.005
Lead	0.005
Mercury	0.002
Selenium	0.001
Silver	0.01

3). Synthetic precipitation leaching procedure (SPLP) – EPA Method 1312 for:

Same list as in #1 above except detection limits are mg/1, no chloride, no sulfate, and no TOC:

Alkalinity	1.0 mg/1
PH	0.1 units
Specific conductance	10.0 mg/1
Total hardness	1.0 mg/1
Chemical oxygen demand	5.0 mg/1
Total dissolved solids	

4). Physical test for:

Dry bulk density	ASTM D5057
Moisture content	Method 160.3
Percent combustibles	ASTM D3174

Please send the test results to the attention of Mr. Ray Zeman at ray.zeman@co.barron.wi.us , Mr. Brent Bohn at brent.bohn@co.barron.wi.us and Mr. Jeff French at jeff.french@co.barron.wi.us . Please call me at 715-357-6566 if you have any questions.

Sincerely,

Brent Bohn

Assistant Plant Manager

AIR POLLUTION CONTROL OPERATION PERMIT

EI FACILITY NO: 603049040 OPERATION PERMIT NO.: 60304904A-P20

TYPE: Operation Permit Action Type: Part 70 Operation Permit Renewal

In compliance with the provisions of Chapter 285, Wis. Stats., and Chapters NR 400 to NR 499, Wis. Adm. Code,

Name of Source:	Barron County Waste to Energy and Recycling Facility
Street Address:	585 10 1/2 Ave, Almena, Barron County, Wisconsin
Responsible Official, & Title:	Jeff French, County Administrator

is authorized to operate a solid waste management and energy recovery facility in conformity with the plans and specifications dated October 19 and November 2, 2020 and February 19, 2021 and the conditions herein.

This operation permit expires on **June 18, 2026** [s. NR 407.09(1)(b)1., Wis. Adm. Code]. No permittee may continue operation of a source after the operation permit expires, unless the permittee submits a timely and complete application for renewal of the permit. If a timely and complete application for renewal has been submitted, the existing sources covered by this operation permit may continue to operate until the renewal application has been finally acted upon by DNR. [s. 227.51(2), Wis. Stats., and s. NR 407.04(2), Wis. Adm. Code]. A renewal application must be submitted at least 6 months, but not more than 18 months, prior to the expiration date of the operation permit listed above [ss. 285.66(3)(a), Wis. Stats. and NR 407.04(2), Wis. Adm. Code].

Conditions of the permit marked with an asterisk (*) have been created outside of Wisconsin's federally approved State Implementation Plan (SIP) and are not federally enforceable.

This authorization requires compliance by the permit holder with the emission limitations, monitoring requirements and other terms and conditions set forth in all Parts hereof.

Dated at Eau Claire, Wisconsin June 18, 2021

STATE OF WISCONSIN
DEPARTMENT OF NATURAL RESOURCES
For the Secretary

By /s/ Susan Lindem
Susan Lindem, Air Management Program Supervisor

PREAMBLE TO OPERATION PERMIT

Historical Summary of Permits/Orders Issued to the Facility

Permit/Order/Exemption Number	Issued/Approved	Sources covered and desc.[†]	Status
603049040-P01	04/25/2002	Total facility	Renewed by 603049040-P10
13-POY-043	05/05/2016	I40, I41, P20, P30	Included in 603049040-P10
603049040-P10	06/28/2016	Total facility	Renewed by 60304904A-P20
20-BAP-152	06/08/2021	I40, I41, P40	Included in 60304904A-P20
60304904A-P20	06/18/2021	Total facility	Primary Enforcement Document

[†] – Total Facility refers to all existing units at the facility at the time of issuance of the permit listed.

Stack and Process Index:

A. **Stack S10: Processes I40 & I41 –** Two Consumat dual chambered, stepped hearth, modular starved air municipal waste combustion units with energy recovery, combined combustion capacity of 100 tons per day to be increased to 150 tons per day under 20-BAP-152
Control Device C01 – Acid gas removal system consisting of a lime and powder activated carbon flue gas injection system to be upgraded to a circulating fluid bed scrubber and two cyclones under 20-BAP-152
Control Device C02 – Baghouse

B. **Stack S40:** Process P40 – Emergency natural gas-fired stationary spark ignition reciprocating internal combustion engine, 400 kW electrical output (536 HP), 4.71 MMBtu/hr heat input, to be constructed under 20-BAP-152

Emissions Units, Operations and Activities Listed under s. NR 407.05(4)(c)9.:[1]

Maintenance of Grounds, Equipment, and Buildings
Fuel Oil Storage Tanks (< 10,000 gal)
Demineralization and Oxygen Scavenging of Water for Boilers
Purging of Natural Gas Lines
Boiler, Turbine, and HVAC System Maintenance
Pollution Control Equipment Maintenance
Internal Combustion Engine Used for Warehouse and Material Transfer
Fire Control Equipment
Janitorial Services
Office Activities
Convenience Water Heating
Steam Condenser
Convenience Space Heating (< 5 million BTU/hr Burning Gas, Liquid, or Wood)
Stockpiled Contaminated Soils
Sanitary Sewer and Plumbing Venting
Ash Handling and Loadout Waste Handling, Mixing, and Loading

Permit Shield - Unless precluded by the administrator of the US EPA under 42 USC 7661c(f), compliance with all emission limitations in this operation permit is considered to be compliance with all emission limitations established under ss. 285.01 to 285.87, Wis. Stats., and emission limitations under the federal clean air act that are applicable to the source as of the date of issuance of this permit, if the permit includes the applicable emission limitation or the department determines in writing that the emission limitations do not apply by listing them below. [s. 285.62(10)(b), Wis. Stats., s. NR 407.09(5), Wis. Adm. Code]

[1] The emissions units, operations and activities listed here are those identified in s. NR 407.05(4)(c)9., Wis. Adm. Code that are not otherwise include in Part I of this permit. These units, operations and activities are subject to all applicable requirements including those listed in Part II.

In acting on the application for this permit, the department determined the following emission limitations do not apply to this stationary source at the time of issuance of this permit:

None

No condition of this permit alters or affects:
1. The authority of the administrator of the EPA under section 303 of the Act (42 USC 7603).
2. The liability of the permittee for any violation of applicable requirements prior to or at the time of permit issuance.
3. The applicable requirements of the acid rain program.
4. The ability of the administrator of the EPA to obtain information from a source pursuant to section 114 of the Act (USC 7414).
   [s. NR 407.09(5)(b), Wis. Adm. Code]

Construction Permit Conditions - The Wisconsin Department of Natural Resources issues Air Pollution Control Operation Permits for sources of air pollution, as required by chapter NR 407, Wis. Adm. Code, and Title V of the Clean Air Act (Act). Operation permits may contain conditions established under the permit programs for new and modified emission units, pursuant to chapters NR 405, 406, and 408, Wis. Adm. Code, and Title I of the Act. The terms or conditions of any construction permit issued pursuant to ch. NR 405, 406 or 408, Wis. Adm. Code are applicable requirements as defined by s. NR 400.02(26)(b), Wis. Adm. Code. This operation permit contains provisions that are consistent with any condition in a previously issued construction permit that is still applicable to the source. The specific conditions in this operation permit that were in previously issued construction permits are identified by referencing the appropriate construction permit number in the square brackets [] at the end of the condition as the origin of the condition. Conditions in this operation permit that contain a construction permit number in square brackets [] do not replace, revise or supersede the original construction permit condition contained in the referenced construction permit. Conditions that are contained in construction permits are permanent unless the conditions are revised through a revision of the construction permit or through the issuance of a new construction permit. Conditions contained in previously issued construction permits that are revised by construction permit revision(s) processed with this operation permit are revised under the authority of s. NR 406.11, Wis. Adm. Code and are identified by referencing the appropriate construction permit revision number in the square brackets [] at the end of the condition.

Part I - The headings for the columns in the permit are defined below. The origin of and authority for each permit condition are identified in square brackets [] at the end of each condition.

Limitations - This column lists all applicable emission limitations that apply to the source, including case-by-case limitations such as Latest Available Control Techniques (LACT), Best Available Control Technology (BACT), or Lowest Achievable Emission Rate (LAER). It also lists any elected restrictions on hours of operation, raw material use, or production rate requested by the permittee to limit potential to emit.

Compliance Demonstration - The compliance demonstration column contains applicable compliance testing, monitoring, reporting and recordkeeping requirements to assure compliance with the associated emission limitations and work practice standards listed in the **Limitations** column. Any requirement to perform compliance emission testing as well as initial and periodic test schedules, if required, are included here. Notwithstanding the listed compliance demonstration methods and the compliance determination requirements in ch. NR 439, Wis. Adm. Code, the Department may use any relevant information or appropriate method to determine a source's compliance with applicable emission limitations.

Reference Test Methods, Recordkeeping, and Monitoring Requirements - Applicable recordkeeping and monitoring requirements, their frequency, and reporting requirements are included in this column. Accuracy of monitoring equipment shall meet, at a minimum, the requirements of s. NR 439.055(3) and (4), Wis. Adm. Code, as specified in Part II of this permit. Compliance emission test methods and procedures are included in Part II of this permit. Additional or alternate applicable test methods that must be used whenever testing is required are identified in this column. A reference test method is listed in Part II or in this column even if no testing is immediately required.

New Source Performance Standards (NSPS) and National Emission Standards for Hazardous Air Pollutants (NESHAP) – Permit condition numbering in NSPS and NESHAP sections of the permit differs from permit condition numbering in other sections of the permit. The permit condition numbers in sections of the permit that contain NSPS and NESHAP requirements are the associated provision numbers from the relevant standard as they appear in the Part and Subpart of Title 40 of the Code of Federal Regulations referenced in the table header. References to provisions of 40 CFR contained within the permit conditions reference permit conditions with the same number as the referenced provision. The primary condition numbers in bold parentheses with a decimal represent the section number of the standard. The number to the left of the decimal is the Part of 40 CFR (e.g. 60 for the NSPS requirements in 40 CFR Part 60, 63 for the NESHAP requirements in 40 CFR Part 63.) The number to the right of the decimal is the section number from the Subpart identified in the table header. References to "this section" in permit conditions in NSPS and NESHAP sections of the permit refer to the section of the associated Part and Subpart of 40 CFR referenced in the table header and the corresponding primary permit condition number with a decimal in bold parentheses. References to "this subpart" in permit conditions in NSPS and NESHAP sections of the permit refer to the Part and Subpart of 40 CFR referenced in the table header. NSPS and NESHAP requirements are included in the permit under the authority of s. 285.65(13), Wis. Stats.

Part II - This section contains general limitations and standard conditions that all permittees must abide by. These requirements are included in this section with every permit.

An Asterisk (*) throughout this document denotes legal authority, limitations and conditions which are not federally enforceable [Section NR 407.09(3)(b), Wis. Adm. Code.].

"You", "your", "person" and "owner or operator" throughout this permit means the owner or operator of the facility to which this permit was issued where the term is used. [s. NR 460.02(41), Wis. Adm. Code]

Part I: Source Specific Permit Conditions

A. Stack S10: Processes I40 & I41 – Two Consumat dual chambered, stepped hearth, modular starved air municipal waste combustion units with energy recovery, combined combustion capacity of 100 tons per day to be increased to 150 tons per day under 20-BAP-152
Control Device C01 – Acid gas removal system consisting of a lime and powder activated carbon flue gas injection system to be upgraded to a circulating fluid bed scrubber and two cyclones under 20-BAP-152
Control Device C02 – Baghouse

1. Pollutant: Particulate Matter / PM_{10} Emissions

a. Limitations	**b.** Compliance Demonstration	**c.** Reference Test Methods, Recordkeeping and Monitoring Requirements
(1) The permittee may not cause, allow or permit particulate matter, concentration corrected to 12% carbon dioxide, to be emitted to the ambient air from I40 and I41 in excess of 0.15 pounds of particulate matter per 1,000 pounds of exhaust gas. [s. NR 415.07(2)(a)1., Wis. Adm. Code; 20-BAP-152] **(2)** *Federal Plan Requirements for Small Municipal Waste Combustion Units:* Prior to the physical modification allowing an increase in combustion capacity, Processes I40 and I41 are subject to the applicable requirements of 40 CFR part 62, subpart JJJ, and shall comply with the applicable federal plan requirements in section I.A.7. of this permit. [40 CFR 62.15010(a)(1)-(3) and (b); s. 285.65(13), Wis. Stats.] **(3)** *New Source Performance Standards (NSPS) for Small Municipal Waste Combustion Units:* After the physical modification allowing an increase in combustion capacity, Processes I40 and I41 are subject to the applicable requirements of 40 CFR part 60, subpart AAAA, and shall comply with the applicable NSPS requirements in section I.A.8. of this permit. [40 CFR 60.1010; s. 285.65(13), Wis. Stats.]	**(1)** The permittee shall operate baghouse control device C02 to control particulate matter emissions whenever process I40 and/or I41 is in operation. [s. 285.65(3), Wis. Stats.; s. NR 407.09(4)(a)1., Wis. Adm. Code; 20-BAP-152] **(2)** The permittee shall install, operate and maintain equipment to monitor the pressure drop across baghouse control device C02. [s. NR 439.055(1)(a), Wis. Adm. Code; 20-BAP-113] **(3)** The permittee shall perform internal inspections of the baghouse no less frequently than once per calendar quarter and maintenance/repair as necessary to ensure the control device is operating properly. [s. 285.65(3), Wis. Stats.; s. NR 407.09(4)(a)1., Wis. Adm. Code; 20-BAP-152]	**(1)** The permittee shall monitor and record the pressure drop, in inches of water, across the baghouse control device C02 once for every 8 hours of source operation or once per day, whichever yields the greater number of measurements. [s. NR 439.055(2)(b)1., Wis. Adm. Code; 20-BAP-152] **(2)** The permittee shall keep records of: **(a)** The date and the initials of the person performing the inspections required by condition I.A.1.b.(3); **(b)** A list of the items inspected; and **(c)** Any maintenance or repairs performed as a result of the inspection. [s. NR 439.04(1)(d), Wis. Adm. Code; 20-BAP-152]

A. Stack S10: Processes I40 & I41 – Two Consumat dual chambered, stepped hearth, modular starved air municipal waste combustion units with energy recovery, combined combustion capacity of 100 tons per day to be increased to 150 tons per day under 20-BAP-152
Control Device C01 – Acid gas removal system consisting of a lime and powder activated carbon flue gas injection system to be upgraded to a circulating fluid bed scrubber and two cyclones under 20-BAP-152
Control Device C02 – Baghouse

2. Pollutant: Visible Emissions

a. Limitations	**b.** Compliance Demonstration	**c.** Reference Test Methods, Recordkeeping and Monitoring Requirements
(1) The permittee may not cause or allow emissions of shade or density greater than number 1 of the Ringlemann chart or 20% opacity, with the exceptions in s. NR 431.05, Wis. Adm. Code. [s. NR 431.05, Wis. Adm. Code; 20-BAP-152] **(2)** *Federal Plan Requirements for Small Municipal Waste Combustion Units:* Prior to the physical modification allowing an increase in combustion capacity, Processes I40 and I41 are subject to the applicable requirements of 40 CFR part 62, subpart JJJ, and shall comply with the applicable federal plan requirements in section I.A.7. of this permit. [40 CFR 62.15010(a)(1)-(3) and (b); s. 285.65(13), Wis. Stats.] **(3)** *New Source Performance Standards (NSPS) for Small Municipal Waste Combustion Units:* After the physical modification allowing an increase in combustion capacity, Processes I40 and I41 are subject to the applicable requirements of 40 CFR part 60, subpart AAAA, and shall comply with the applicable NSPS requirements in section I.A.8. of this permit. [40 CFR 60.1010; s. 285.65(13), Wis. Stats.]	**(1)** The compliance demonstration methods listed for particulate matter emissions in I.A.1.b.(1)-(3) shall also serve as compliance demonstration methods for the visible emissions limitation in I.A.2.a.(1). [s. 285.65(3), Wis. Stats., s. NR 407.09(4)(a)1., Wis. Adm. Code; 20-BAP-152]	**(1)** The recordkeeping and monitoring requirements listed for particulate matter emissions in I.A.1.c.(1)-(2) shall also serve as the recordkeeping and monitoring requirements for the visible emissions limitation in I.A.2.a.(1). [s. NR 439.04(1)(d), Wis. Adm. Code; 20-BAP-152]

A. Stack S10: Processes I40 & I41 – Two Consumat dual chambered, stepped hearth, modular starved air municipal waste combustion units with energy recovery, combined combustion capacity of 100 tons per day to be increased to 150 tons per day under 20-BAP-152
Control Device C01 – Acid gas removal system consisting of a lime and powder activated carbon flue gas injection system to be upgraded to a circulating fluid bed scrubber and two cyclones under 20-BAP-152
Control Device C02 – Baghouse

3. Pollutant: Nitrogen Oxides Emissions

a. Limitations	**b.** Compliance Demonstration	**c.** Reference Test Methods, Recordkeeping and Monitoring Requirements
(1) The permittee may not cause, allow, or permit emissions of nitrogen oxides to the ambient air in excess of 44.7 pounds per hour. [2] [ss. 285.63(1)(b) and 285.65(3), Wis. Stats.; 20-BAP-152] **(2)** *Federal Plan Requirements for Small Municipal Waste Combustion Units:* Prior to the physical modification allowing an increase in combustion capacity, Processes I40 and I41 are subject to the applicable requirements of 40 CFR part 62, subpart JJJ, and shall comply with the applicable federal plan requirements in section I.A.7. of this permit. [40 CFR 62.15010(a)(1)-(3) and (b); s. 285.65(13), Wis. Stats.] **(3)** *New Source Performance Standards (NSPS) for Small Municipal Waste Combustion Units:* After the physical modification allowing an increase in combustion capacity, Processes I40 and I41 are subject to the applicable requirements of 40 CFR part 60, subpart AAAA, and shall comply with the applicable NSPS requirements in section I.A.8. of this permit. [40 CFR 60.1010; s. 285.65(13), Wis. Stats.]	**(1)** The permittee shall install, calibrate, maintain, and operate a continuous temperature monitoring system to measure and record the operating temperature of the secondary combustion chamber of each combustor. [s. 285.65(3), Wis. Stats., s. NR 407.09(4)(a)1., Wis. Adm. Code; 20-BAP-152] **(2)** The permittee shall operate control device C01 to control acid gas emissions whenever process I40 and/or I41 is in operation. [s. 285.65(3), Wis. Stats., s. NR 407.09(4)(a)1., Wis. Adm. Code; 20-BAP-152] **(3)** The permittee shall perform inspections of control device C01 no less frequently than once per calendar quarter and maintenance/repair as necessary to ensure the control device is operating properly. [s. 285.65(3), Wis. Stats.; s. NR 407.09(4)(a)1., Wis. Adm. Code; 20-BAP-152] **(4)** Prior to the upgrade of acid gas removal system C01, the permittee shall monitor and record the amount activated carbon injected into the flue gas. [s. 285.65(3), Wis. Stats., s. NR 407.09(4)(a)1., Wis. Adm. Code; 20-BAP-152] **(5)** After the upgrade of the acid gas removal system C01, the permittee shall monitor and record the following:	**(1)** The permittee shall continuously monitor and record the operating temperature of the secondary combustion chamber of each combustor. [s. NR 439.055(5), Wis. Adm. Code; 20-BAP-152] **(2)** The permittee shall keep records of: **(a)** The date and the initials of the person performing the inspections required by condition I.A.3.b.(3); **(b)** A list of the items inspected; and **(c)** Any maintenance or repairs performed as a result of the inspection. [s. NR 439.04(1)(d), Wis. Adm. Code; 20-BAP-152] **(3)** Prior to the upgrade of acid gas removal system C01, the permittee shall keep monthly records of the amount of activated carbon injected into the flue gas. [s. NR 439.04(1)(d), Wis. Adm. Code; 20-BAP-152] **(4)** After the upgrade of the acid gas removal system C01, the permittee shall monitor and record the following once for every 8 hours of source operation or

[2] This limit is necessary to ensure the source will not cause or exacerbate a violation of the NO_2 NAAQS.

A. Stack S10: Processes I40 & I41 – Two Consumat dual chambered, stepped hearth, modular starved air municipal waste combustion units with energy recovery, combined combustion capacity of 100 tons per day to be increased to 150 tons per day under 20-BAP-152 **Control Device C01 –** Acid gas removal system consisting of a lime and powder activated carbon flue gas injection system to be upgraded to a circulating fluid bed scrubber and two cyclones under 20-BAP-152 **Control Device C02 –** Baghouse		
3. Pollutant: Nitrogen Oxides Emissions		
a. Limitations	**b.** Compliance Demonstration	**c.** Reference Test Methods, Recordkeeping and Monitoring Requirements
	(a) The amount of lime introduced into the control system. **(b)** The pressure drop across control device C01. [s. 285.65(3), Wis. Stats., s. NR 407.09(4)(a)1., Wis. Adm. Code; 20-BAP-152]	once per day, whichever yields the greatest number of measurements: **(a)** The amount of lime introduced into the control system. **(b)** The pressure drop across control device C01 in inches of water. [s. NR 439.055(2)(b)1., Wis. Adm. Code; 20-BAP-152]

A. Stack S10: Processes I40 & I41 – Two Consumat dual chambered, stepped hearth, modular starved air municipal waste combustion units with energy recovery, combined combustion capacity of 100 tons per day to be increased to 150 tons per day under 20-BAP-152
Control Device C01 – Acid gas removal system consisting of a lime and powder activated carbon flue gas injection system to be upgraded to a circulating fluid bed scrubber and two cyclones under 20-BAP-152
Control Device C02 – Baghouse

4. Pollutant: State Hazardous Air Contaminant Emissions

a. Limitations	**b.** Compliance Demonstration	**c.** Reference Test Methods, Recordkeeping and Monitoring Requirements
(1) To comply with s. NR 445.07(4), Wis. Adm. Code, the permittee shall use the method of compliance in s. NR 445.08(3)(b), Wis. Adm. Code. [3] **(a)** Toxic equivalent of 2,3,7,8-tetrachloro-dibenzo dioxin (TCDD) emissions may not exceed 8.18 x 10^{-9} grams per second. **(b)** Hexavalent Chromium (Cr(VI)), measured as Cr, emissions may not exceed 9.90 x 10^{-4} grams per second. **(c)** Dibenz(a,h)anthracene emissions may not exceed 2.50 x 10^{-7} grams per second. **(d)** Cadmium, measured as Cd, emissions may not exceed 5.45 x 10^{-4} grams per second. **(e)** Lead, measured as Pb, emissions may not exceed 8.7 x 10^{-3} grams per second. **(f)** Formaldehyde emissions may not exceed 4.86 x 10^{-3} grams per second. **(g)** Benzo(a)pyrene emissions may not exceed 2.50 x 10^{-7} grams per second. [s. NR 445.08(3)(b)1., Wis. Adm. Code; 20-BAP-152] *	**(1)** The compliance demonstration methods listed for particulate matter emissions in I.A.1.b.(1)-(3) shall also serve as compliance demonstration methods for the hazardous air contaminant emissions limitations in I.A.4.a.(1)-(3). [s. 285.65(3), Wis. Stats.; s. NR 407.09(4)(a)1., Wis. Adm. Code; 20-BAP-152] * **(2)** The compliance demonstration methods listed for nitrogen oxides emissions in I.A.3.b.(2)-(5) shall also serve as compliance demonstration methods for the hazardous air contaminant emissions limitations in I.A.4.a.(1)-(3). [s. 285.65(3), Wis. Stats.; s. NR 407.09(4)(a)1., Wis. Adm. Code; 20-BAP-152] * **(3)** The operating temperature of the exhaust gas entering baghouse C02 may not exceed 400ºF. [s. 285.65(3), Wis. Stats.; s. NR 407.09(4)(a)1., Wis. Adm. Code; 20-BAP-152] * **(4)** The permittee shall install, calibrate, maintain, and operate a continuous temperature monitoring system to measure and record the operating temperature of the exhaust gas entering the baghouse. [s. 285.65(3), Wis. Stats.; s. NR 407.09(4)(a)1., Wis. Adm. Code; 20-BAP-152] *	**(1)** The recordkeeping and monitoring requirements listed for particulate matter emissions in I.A.1.c.(1)-(2) shall also serve as recordkeeping and monitoring requirements for the hazardous air contaminant emissions limitations in I.A.4.a.(1)-(3). [s. NR 439.04(1)(d), Wis. Adm. Code; 20-BAP-152] * **(2)** The recordkeeping and monitoring requirements listed for nitrogen oxides emissions in I.A.3.c.(2)-(4) shall also serve as recordkeeping and monitoring requirements for the hazardous air contaminant emissions limitations in I.A.4.a.(1)-(3). [s. NR 439.04(1)(d), Wis. Adm. Code; 20-BAP-152] * **(3)** The permittee shall continuously monitor and record the operating temperature of the exhaust gas entering the baghouse. [s. NR 439.055(5), Wis. Adm. Code; 20-BAP-152] * **(4)** For determining compliance with the emission limits in I.A.4.a.(1)(a), (d), and (e), the permittee shall use the test methods specified in: **(a)** I.A.7.a.(62.15245) prior to the physical modification allowing an increase in combustion capacity; or

[3] The emission rates in condition I.A.4.a.(1) are the rates used in the cumulative multi-pathway impact assessment.

A. Stack S10: Processes I40 & I41 – Two Consumat dual chambered, stepped hearth, modular starved air municipal waste combustion units with energy recovery, combined combustion capacity of 100 tons per day to be increased to 150 tons per day under 20-BAP-152
Control Device C01 – Acid gas removal system consisting of a lime and powder activated carbon flue gas injection system to be upgraded to a circulating fluid bed scrubber and two cyclones under 20-BAP-152
Control Device C02 – Baghouse

4. Pollutant: State Hazardous Air Contaminant Emissions

a. Limitations	**b.** Compliance Demonstration	**c.** Reference Test Methods, Recordkeeping and Monitoring Requirements
(2) The permittee shall limit emissions of hydrogen chloride to less than 9.15 pounds per hour. [s. NR 445.08(2)(a), Wis. Adm. Code; 20-BAP-152] * **(3)** The permittee shall limit emissions of mercury to less than 0.0405 pounds per hour on a 24-hour average basis. [s. NR 445.08(2)(a), Wis. Adm. Code; 20-BAP-152] *	**(5)** The permittee shall conduct compliance emission tests for each of the pollutants with an emission limit in I.A.4.a.(1) at the frequency specified in I.A.4.b.(6) using the test methods specified in I.A.4.c.(5)-(8) while operating at 100% capacity. If operation at 100% capacity is not feasible, the source shall operate at a capacity level which is approved by the Department in writing. [ss. 285.65(3) and (10), Wis. Stats.; s. NR 407.09(1)(c)1.b., Wis. Adm. Code; 20-BAP-152] * **(6)** The permittee shall perform compliance emission tests for each of the pollutants with an emission limit in I.A.4.a.(1) at the same frequency as that specified in: **(a)** I.A.7.a.(62.15240) and (62.15250) prior to the physical modification allowing an increase in combustion capacity; or **(b)** I.A.8.a.(60.1295) and (60.1305) after the physical modification allowing an increase in combustion capacity. [ss. 285.65(3) and (10), Wis. Stats.; s. NR 407.09(1)(c)1.b., Wis. Adm. Code; 20-BAP-152] *	**(b)** I.A.8.a.(60.1230) after the physical modification allowing an increase in combustion capacity. [s. NR 439.06(8), Wis. Adm. Code; 20-BAP-152] * **(5)** The permittee shall use EPA Reference Method 0061, or another method approved in writing by the Department, for determining compliance with the chromium emission limit in I.A.3.a.(1)(b). [s. NR 439.06(8), Wis. Adm. Code; 20-BAP-152] * **(6)** The permittee shall use modified EPA Reference Method 23, or another method approved in writing by the Department, for determining compliance with the dibenz(a,h)anthracene and benzo(a)pyrene emission limits in I.A.4.a.(1)(c) and (g), respectively. [s. NR 439.06(8), Wis. Adm. Code; 20-BAP-152] * **(7)** The permittee shall use EPA Reference Method 0011, or another method approved in writing by the Department, for determining compliance with the formaldehyde emission limit in I.A.4.a.(1)(f). [s. NR 439.06(8), Wis. Adm. Code; 20-BAP-152] * **(8)** The permittee shall keep and maintain records of the results of all emissions tests conducted. [s. NR 439.04(1)(d), Wis. Adm. Code; 20-BAP-152] *

A. Stack S10: Processes I40 & I41 – Two Consumat dual chambered, stepped hearth, modular starved air municipal waste combustion units with energy recovery, combined combustion capacity of 100 tons per day to be increased to 150 tons per day under 20-BAP-152
Control Device C01 – Acid gas removal system consisting of a lime and powder activated carbon flue gas injection system to be upgraded to a circulating fluid bed scrubber and two cyclones under 20-BAP-152
Control Device C02 – Baghouse

5. Operating Requirements: Waste Prohibited and Waste Allowed

a. Limitations	**b.** Compliance Demonstration	**c.** Reference Test Methods, Recordkeeping and Monitoring Requirements
(1) The permittee may not burn the following types of wastes in the two municipal solid waste combustors (I40 and I41). [4] **(a)** Hazardous waste as defined in 40 CFR §63.1201 and §261.3 and in s. NR 661.0003 and Ch. NR 661, Subchapters B, C, and D, Wis. Adm. Code. A waste determination must be conducted by the generator to determine whether the waste offered meets the definition of hazardous waste in Ch. NR 661, Wis. Adm. Code. **(b)** Medical waste as defined in s. 287.07(7)(c)1.cg., Wis. Stats. **(c)** Infectious waste as defined in s. 287.07(7)(c)1.c., Wis. Stats. **(d)** Antineoplastic chemotherapy drugs, their containers and spill cleanup materials. [s. 285.65(7), Wis. Stats.; 20-BAP-152] **(2)** The permittee may burn the following waste in the two municipal solid waste combustors (I40 and I41) at a combined rate of no more than 150 tons per day. [5] **(a)** Municipal solid waste as defined in 40 CFR §62.15410 and §60.1405 and in s. NR 500.03(150), Wis. Adm. Code. **(b)** Non-hazardous industrial, manufacturing, process wastes, including recycling operations residue, and automotive fluff. **(c)** Waste tires, whole or shredded. **(d)** Non-hazardous construction, renovation, and demolition wastes, including wood pallets and other non-treated clean wood. Asbestos-containing materials may not be burned. **(e)** Residential asphaltic shingles.	**(1)** To demonstrate compliance with I.A.5.a.(1) and (2), the permittee shall keep the records specified in I.A.5.c.(1) and (2). [s. 285.65(3), Wis. Stats.; s. NR 407.09(4)(a)1., Wis. Adm. Code; 20-BAP-152] **(2)** Unless the used oil is incidentally mixed in the collected household waste, the permittee shall record the origin of the used oil and determine the total halogen content in each batch of the used oil to determine if it is allowable to be burned. The used oil must be managed to meet the requirements in Ch. NR 679, Subchapter G, Wis. Adm. Code. [s. 285.65(3), Wis. Stats.; s. NR 407.09(4)(a)1., Wis. Adm. Code; 20-BAP-152] **(3)** The permittee shall prepare and implement a written waste acceptance plan. The permittee shall keep a copy of that plan onsite and make that plan available to Department personnel upon request during normal business hours.	**(1)** The permittee shall keep the following records for each load of waste received: **(a)** The mass of waste received; **(b)** The type of waste received; **(c)** Whether the waste is prohibited according to I.A.5.a.(1) or allowed according to I.A.5.a.(2). [s. NR 439.04(1)(d), Wis. Adm. Code; 20-BAP-152] **(2)** The permittee shall keep and maintain daily records of: **(a)** The total combined mass of waste fed into the two combustors; **(b)** The total mass of waste rejected. [s. NR 439.04(1)(d), Wis. Adm. Code; 20-BAP-152] **(3)** The permittee shall keep records of used oil halogen content for each batch of used oil received. Records shall indicate whether each batch received was subsequently kept for combustion or rejected as hazardous waste. [s. NR 439.04(1)(d), Wis. Adm. Code; 20-BAP-152]

[4] This condition was elected by the permittee to ensure that I40 and I41 meet the definition of municipal solid waste combustion units.
[5] This condition was elected by the permittee to ensure that I40 and I41 meet the definition of small municipal solid waste combustion units.

A. Stack S10: Processes I40 & I41 – Two Consumat dual chambered, stepped hearth, modular starved air municipal waste combustion units with energy recovery, combined combustion capacity of 100 tons per day to be increased to 150 tons per day under 20-BAP-152
Control Device C01 – Acid gas removal system consisting of a lime and powder activated carbon flue gas injection system to be upgraded to a circulating fluid bed scrubber and two cyclones under 20-BAP-152
Control Device C02 – Baghouse

5. Operating Requirements: Waste Prohibited and Waste Allowed

a. Limitations	**b.** Compliance Demonstration	**c.** Reference Test Methods, Recordkeeping and Monitoring Requirements
(f) Materials containing used oil. Used oil filters, oil absorbent materials, and oil contaminated soils may be burned for energy recovery in compliance with Ch. NR 679, Wis. Adm. Code. **(g)** Treated wood including telephone poles and railroad ties that are determined not to be hazardous waste. **(h)** Household pharmaceutical wastes. **(i)** Household hazardous and non-hazardous waste pharmaceuticals collected in a take-back event or program can be burned in accordance with s. NR 666.506, Wis. Adm. Code. **(ii)** Personal care products. **(iii)** Pharmaceuticals collected by law enforcement, registered with the drug enforcement administration, that commingles the household waste pharmaceuticals with controlled substances from an ultimate user, as defined by the drug enforcement administration in accordance with s. NR 666.506, Wis. Adm. Code. **(iv)** Confiscated drugs from law enforcement agencies. **(i)** Trace chemotherapy waste as defined in s. NR 500.03(237m), Wis. Adm. Code. [s. 285.65(7), Wis. Stats.; 20-BAP-152]	[s. 285.65(3), Wis. Stats.; s. NR 407.09(4)(a)1., Wis. Adm. Code; 20-BAP-152]	

A. Stack S10: Processes I40 & I41 – Two Consumat dual chambered, stepped hearth, modular starved air municipal waste combustion units with energy recovery, combined combustion capacity of 100 tons per day to be increased to 150 tons per day under 20-BAP-152
Control Device C01 – Acid gas removal system consisting of a lime and powder activated carbon flue gas injection system to be upgraded to a circulating fluid bed scrubber and two cyclones under 20-BAP-152
Control Device C02 – Baghouse

6. Training and Certification Requirements for Solid Waste Treatment Facility Operators

a. Limitations	**b.** Compliance Demonstration	**c.** Reference Test Methods, Recordkeeping and Monitoring Requirements
(1) The permittee shall meet the following requirements: **(a)** There shall be one or more certified operators on the site at all times during the facility's hours of operation. The hours of operation include the burn down cycle. **(b)** The permittee shall employ at least one certified operator at the chief facility operator or interim chief facility operator level. The duties of the chief facility operator are defined in s. NR 499.06(1), Wis. Adm. Code. [s. NR 499.04(2)(a) and (b), Wis. Adm. Code; 20-BAP-152] **(2)** The permittee shall use a training program approved in writing by the department. [s. NR 499.08(2), Wis. Adm. Code; 20-BAP-152]	**(1)** Each chief facility operator shall obtain and keep a current operator certification under ss. NR 499.09 and 499.10, Wis. Adm. Code. [ss. NR 499.05 and 499.09, Wis. Adm. Code; 20-BAP-152] **(2)** Any person who wishes to become a certified operator shall take and pass an examination administered by the department under Ch. NR 499, Wis. Adm. Code. [s. NR 499.09(1)(a), Wis. Adm. Code; 20-BAP-152] **(3)** Any chief facility operator shall annually complete a minimum of 4 hours of department-approved refresher training in order to renew his or her certification. Refresher training shall be completed before the certification expires. [s. NR 499.10(2) and (3), Wis. Adm. Code; 20-BAP-152] **(4)** The permittee shall keep their approved training program up to date. **(a)** Training program approvals shall be valid for 2 years.	**(1)** All certificates issued by the department under Ch. NR 499, Wis. Adm. Code, shall be displayed on the premises of the facility where the certified operators are employed. [s. NR 499.04(2)(d), Wis. Adm. Code; 20-BAP-152] **(2)** The permittee shall notify the Department in writing of the appointment of an interim chief facility operator within 10 business days of the appointment. This appointment is valid for 6 months and may be renewed. Any request for renewing an interim chief facility operator appointment shall be in writing and filed with the department at least 30 days prior to expiration of the 6-month period. The department may deny a request for renewal of an interim chief facility operator if the department determines that inadequate attempts have been made to hire a permanent chief facility operator. [s. NR 499.04(2)(c), Wis. Adm. Code; 20-BAP-152] **(3)** The permittee shall submit to the Department for approval a training program application whenever the training program is updated or renewed. **(a)** An application for an updated training program shall include all of the information specified in s. NR 499.08(2), Wis. Adm. Code.

A. Stack S10: Processes I40 & I41 – Two Consumat dual chambered, stepped hearth, modular starved air municipal waste combustion units with energy recovery, combined combustion capacity of 100 tons per day to be increased to 150 tons per day under 20-BAP-152
Control Device C01 – Acid gas removal system consisting of a lime and powder activated carbon flue gas injection system to be upgraded to a circulating fluid bed scrubber and two cyclones under 20-BAP-152
Control Device C02 – Baghouse

6. Training and Certification Requirements for Solid Waste Treatment Facility Operators

a. Limitations	**b.** Compliance Demonstration	**c.** Reference Test Methods, Recordkeeping and Monitoring Requirements
	(b) An approved training program shall be updated when environmental regulations that apply to solid waste treatment facilities change. [s. NR 499.08(3), Wis. Adm. Code; 20-BAP-152]	**(b)** In order to renew training program approval, an application containing the items listed in s. NR 499.08(2)(b), (c), and (d), Wis. Adm. Code, shall be submitted to the department within 20 days prior to expiration of the training program approval. [s. NR 499.08(3), Wis. Adm. Code; 20-BAP-152]

A. Stack S10: Processes I40 & I41 – Two Consumat dual chambered, stepped hearth, modular starved air municipal waste combustion units with energy recovery, combined combustion capacity of 100 tons per day to be increased to 150 tons per day under 20-BAP-152
Control Device C01 – Acid gas removal system consisting of a lime and powder activated carbon flue gas injection system to be upgraded to a circulating fluid bed scrubber and two cyclones under 20-BAP-152
Control Device C02 – Baghouse

7. Federal Plan Requirements for Small Municipal Waste Combustion Units Constructed on or Before August 30, 1999. [40 CFR Part 62, Subpart JJJ, as last amended 01/31/2003]

The permit condition numbers in this section of the permit are the associated provision numbers from the relevant standard as they appear in the above referenced Part and Subpart of Title 40 of the Code of Federal Regulations. References to provisions of 40 CFR contained within the permit conditions reference permit conditions with the same number as the referenced provision.

a. Requirements

(62.15010) *Applicability of 40 CFR part 62, subpart JJJ*

(a) 40 CFR part 60, subpart JJJ, applies to municipal waste combustors I40 and I41 prior to the physical modification allowing for an increase in combustion capacity.

(b) Once you make a change to your municipal waste combustion unit that meets the definition of modification, your municipal waste combustion unit becomes subject to subpart AAAA of 40 CFR part 60 (New Source Performance Standards for Small Municipal Waste Combustion Units) and 40 CFR part 62, subpart JJJ, no longer applies to your unit.

[40 CFR 62.15010(a)(1)-(3) and (b); s. 285.65(13), Wis. Stats.]

(62.15015), (62.15020), (62.15025), (62.15030) [*Intentionally left blank]*

(62.15035) *Different requirements for small municipal waste combustion units based on plant capacity*
This subpart specifies different requirements for two different subcategories of municipal waste combustion units. These two subcategories are based on aggregate capacity of the municipal waste combustion plant as defined in paragraphs (a) and (b) of this section.

(a) *Class I units. [Intentionally left blank]*

(b) *Class II units.* Processes I40 and I41 are small municipal waste combustion units that are located at municipal waste combustion plants with aggregate plant combustion capacity of no more than 250 tons per day of municipal solid waste.

[40 CFR 62.15035(b); s. 285.65(13), Wis. Stats.]

(62.15040), (62.15045), (62.15050), (62.15055), (62.15060), (62.15065), (62.15070), (62.15075), (62.15080), (62.15085), (62.15090), (62.15095) *[Intentionally left blank]*

(62.15100) *Types of required training*
There are two types of required training:

(a) Training of operators of municipal waste combustion units using the EPA or a State-approved training course.

(b) Training of plant personnel using a plant-specific training course.

[40 CFR 62.15100; s. 285.65(13), Wis. Stats.]

A. Stack S10: Processes I40 & I41 – Two Consumat dual chambered, stepped hearth, modular starved air municipal waste combustion units with energy recovery, combined combustion capacity of 100 tons per day to be increased to 150 tons per day under 20-BAP-152
Control Device C01 – Acid gas removal system consisting of a lime and powder activated carbon flue gas injection system to be upgraded to a circulating fluid bed scrubber and two cyclones under 20-BAP-152
Control Device C02 – Baghouse

7. Federal Plan Requirements for Small Municipal Waste Combustion Units Constructed on or Before August 30, 1999. [40 CFR Part 62, Subpart JJJ, as last amended 01/31/2003]

The permit condition numbers in this section of the permit are the associated provision numbers from the relevant standard as they appear in the above referenced Part and Subpart of Title 40 of the Code of Federal Regulations. References to provisions of 40 CFR contained within the permit conditions reference permit conditions with the same number as the referenced provision.

a. Requirements

(62.15105) *Completion of the operator training course*

(a) Three types of employees must complete the EPA operator training course:

(1) Chief facility operators.

(2) Shift supervisors.

(3) Control room operators.

(b) These employees must complete the operator training course by the later of three dates:

(1) One year after the effective date of this subpart.

(2) Six months after your municipal waste combustion unit starts up.

(3) The date before an employee assumes responsibilities that affect operation of the municipal waste combustion unit.

(c) The requirement in paragraph (a) of this section does not apply to chief facility operators, shift supervisors, and control room operators who have obtained full certification from the American Society of Mechanical Engineers on or before the effective date of 40 CFR part 62, subpart JJJ.

(d) You may request that the EPA Administrator waive the requirement in paragraph (a) of this section for chief facility operators, shift supervisors, and control room operators who have obtained provisional certification from the American Society of Mechanical Engineers on or before the effective date of 40 CFR part 62, subpart JJJ.

[40 CFR 62.15105; s. 285.65(13), Wis. Stats.]

(62.15110) *Completion of the plant-specific training course*

All employees with responsibilities that affect how a municipal waste combustion unit operates must complete the plant-specific training course. Include at least six types of employees:

(a) Chief facility operators.

(b) Shift supervisors.

(c) Control room operators.

(d) Ash handlers.

(e) Maintenance personnel.

(f) Crane or load handlers.

A. Stack S10: Processes I40 & I41 – Two Consumat dual chambered, stepped hearth, modular starved air municipal waste combustion units with energy recovery, combined combustion capacity of 100 tons per day to be increased to 150 tons per day under 20-BAP-152
Control Device C01 – Acid gas removal system consisting of a lime and powder activated carbon flue gas injection system to be upgraded to a circulating fluid bed scrubber and two cyclones under 20-BAP-152
Control Device C02 – Baghouse

7. Federal Plan Requirements for Small Municipal Waste Combustion Units Constructed on or Before August 30, 1999. [40 CFR Part 62, Subpart JJJ, as last amended 01/31/2003]

The permit condition numbers in this section of the permit are the associated provision numbers from the relevant standard as they appear in the above referenced Part and Subpart of Title 40 of the Code of Federal Regulations. References to provisions of 40 CFR contained within the permit conditions reference permit conditions with the same number as the referenced provision.

a. Requirements

[40 CFR 62.15110; s. 285.65(13), Wis. Stats.]

(62.15115) *Plant-specific training requirements*
For plant-specific training, you must do four things:

(a) For training at a particular plant, develop a specific operating manual for that plant by the later of two dates:
(1) Six months after your municipal waste combustion unit starts up.
(2) One year after the effective date of 40 CFR part 62, subpart JJJ.

(b) Establish a program to review the plant-specific operating manual with people whose responsibilities affect the operation of your municipal waste combustion unit. Complete the initial review by the later of three dates:
(1) One year after the effective date of 40 CFR part 62, subpart JJJ.
(2) Six months after your municipal waste combustion unit starts up.
(3) The date before an employee assumes responsibilities that affect operation of the municipal waste combustion unit.

(c) Update your manual annually.

(d) Review your manual with staff annually.

[40 CFR 62.15115; s. 285.65(13), Wis. Stats.]

(62.15120) *Information that must be included in the plant-specific operating manual*
You must include 11 items in the operating manual for your plant:

(a) A summary of all applicable standards in 40 CFR part 62, subpart JJJ.

(b) A description of the basic combustion principles that apply to municipal waste combustion units.

(c) Procedures for receiving, handling, and feeding municipal solid waste.

(d) Procedures to be followed during periods of startup, shutdown, and malfunction of the municipal waste combustion unit.

(e) Procedures for maintaining a proper level of combustion air supply.

(f) Procedures for operating the municipal waste combustion unit within the standards contained in 40 CFR part 62, subpart JJJ.

(g) Procedures for responding to periodic upset or off-specification conditions.

(h) Procedures for minimizing carryover of particulate matter.

A. Stack S10: Processes I40 & I41 – Two Consumat dual chambered, stepped hearth, modular starved air municipal waste combustion units with energy recovery, combined combustion capacity of 100 tons per day to be increased to 150 tons per day under 20-BAP-152
Control Device C01 – Acid gas removal system consisting of a lime and powder activated carbon flue gas injection system to be upgraded to a circulating fluid bed scrubber and two cyclones under 20-BAP-152
Control Device C02 – Baghouse

7. Federal Plan Requirements for Small Municipal Waste Combustion Units Constructed on or Before August 30, 1999. [40 CFR Part 62, Subpart JJJ, as last amended 01/31/2003]

The permit condition numbers in this section of the permit are the associated provision numbers from the relevant standard as they appear in the above referenced Part and Subpart of Title 40 of the Code of Federal Regulations. References to provisions of 40 CFR contained within the permit conditions reference permit conditions with the same number as the referenced provision.

a. Requirements

(i) Procedures for handling ash.

(j) Procedures for monitoring emissions from the municipal waste combustion unit.

(k) Procedures for recordkeeping and reporting.

[40 CFR 62.15120; s. 285.65(13), Wis. Stats.]

(62.15125) *Location of the plant-specific operating manual*

You must keep your operating manual in an easily accessible location at your plant. It must be available for review or inspection by all employees who must review it and by the Administrator.

[40 CFR 62.15125; s. 285.65(13), Wis. Stats.]

(62.15130) *Types of required operator certification for the chief facility operator and shift supervisor*

(a) Each chief facility operator and shift supervisor must obtain and maintain a current provisional operator certification from the American Society of Mechanical Engineers QRO-1-1994. Standard for the Qualification and Certification of Resource Recovery Facility Operators.

(b) Each chief facility operator and shift supervisor must obtain a provisional certification by the later of three dates:

(1) For Class II units, 18 months after the effective date of 40 CFR part 62, subpart JJJ.

(2) Six months after the municipal waste combustion unit starts up.

(3) Six months after they transfer to the municipal waste combustion unit or 6 months after they are hired to work at the municipal waste combustion unit.

(c) Each chief facility operator and shift supervisor must take one of two actions:

(1) Obtain a full certification from the American Society of Mechanical Engineers.

(2) Schedule a full certification exam with the American Society of Mechanical Engineers (QRO-1-1994 (incorporated by reference in s. 60.17 of subpart A of 40 CFR part 60)).

(d) The chief facility operator and shift supervisor must obtain the full certification or be scheduled to take the certification exam by the later of the following dates:

(1) For Class II units, 18 months after the effective date of 40 CFR part 62, subpart JJJ.

(2) Six months after the municipal waste combustion unit starts up.

(3) Six months after they transfer to the municipal waste combustion unit or 6 months after they are hired to work at the municipal waste combustion unit.

A. Stack S10: Processes I40 & I41 – Two Consumat dual chambered, stepped hearth, modular starved air municipal waste combustion units with energy recovery, combined combustion capacity of 100 tons per day to be increased to 150 tons per day under 20-BAP-152
Control Device C01 – Acid gas removal system consisting of a lime and powder activated carbon flue gas injection system to be upgraded to a circulating fluid bed scrubber and two cyclones under 20-BAP-152
Control Device C02 – Baghouse

7. Federal Plan Requirements for Small Municipal Waste Combustion Units Constructed on or Before August 30, 1999. [40 CFR Part 62, Subpart JJJ, as last amended 01/31/2003]

The permit condition numbers in this section of the permit are the associated provision numbers from the relevant standard as they appear in the above referenced Part and Subpart of Title 40 of the Code of Federal Regulations. References to provisions of 40 CFR contained within the permit conditions reference permit conditions with the same number as the referenced provision.

a. Requirements

[40 CFR 62.15130; s. 285.65(13), Wis. Stats.]

(62.15135) *Operation of the municipal waste combustion unit after the required date for operator certification*
After the required date for full or provisional certification, you must not operate your municipal waste combustion unit unless one of four employees is on duty:

(a) A fully certified chief facility operator.

(b) A provisionally certified chief facility operator who is scheduled to take the full certification exam.

(c) A fully certified shift supervisor.

(d) A provisionally certified shift supervisor who is scheduled to take the full certification exam.

[40 CFR 62.15135; s. 285.65(13), Wis. Stats.]

(62.15140) *Requirements when all the certified operators must be temporarily offsite*
If the certified chief facility operator and certified shift supervisor both are unavailable, a provisionally certified control room operator at the municipal waste combustion unit may fulfill the certified operator requirement. Depending on the length of time that a certified chief facility operator and certified shift supervisor is away, you must meet one of three criteria:

(a) When the certified chief facility operator and certified shift supervisor are both offsite for 12 hours or less and no other certified operator is onsite, the provisionally certified control room operator may perform those duties without notice to, or approval by, the Administrator.

(b) When the certified chief facility operator and certified shift supervisor are offsite for more than 12 hours, but for 2 weeks or less, and no other certified operator is onsite, the provisionally certified control room operator may perform those duties without notice to, or approval by, the Administrator. However, you must record the periods when the certified chief facility operator and certified shift supervisor are offsite and include this information in the annual report as specified under 40 CFR 62.15340(l).

(c) When the certified chief facility operator and certified shift supervisor are offsite for more than 2 weeks and no other certified operator is onsite, the provisionally certified control room operator may perform those duties without notice to, or approval by, the Administrator. However, you must take two actions:

(1) Notify the Administrator in writing. In the notice, state what caused the absence and what you are doing to ensure that a certified chief facility operator or certified shift supervisor is onsite.

(2) Submit a status report and corrective action summary to the Administrator every 4 weeks following the initial notification. If the Administrator notifies you that your status report or corrective action summary is disapproved, the municipal waste combustion unit may continue operation for 90 days, but then must

A. Stack S10: Processes I40 & I41 – Two Consumat dual chambered, stepped hearth, modular starved air municipal waste combustion units with energy recovery, combined combustion capacity of 100 tons per day to be increased to 150 tons per day under 20-BAP-152
Control Device C01 – Acid gas removal system consisting of a lime and powder activated carbon flue gas injection system to be upgraded to a circulating fluid bed scrubber and two cyclones under 20-BAP-152
Control Device C02 – Baghouse

7. Federal Plan Requirements for Small Municipal Waste Combustion Units Constructed on or Before August 30, 1999. [40 CFR Part 62, Subpart JJJ, as last amended 01/31/2003]

The permit condition numbers in this section of the permit are the associated provision numbers from the relevant standard as they appear in the above referenced Part and Subpart of Title 40 of the Code of Federal Regulations. References to provisions of 40 CFR contained within the permit conditions reference permit conditions with the same number as the referenced provision.

a. Requirements

cease operation. If corrective actions are taken in the 90-day period such that the Administrator withdraws the disapproval, municipal waste combustion unit operation may continue.

[40 CFR 62.15140; s. 285.65(13), Wis. Stats.]

(62.15145) *Operating practice requirements for municipal waste combustion units*

(a) You must not operate your municipal waste combustion unit at loads greater than 110 percent of the maximum demonstrated load of the municipal waste combustion unit (4-hour block average), as specified under "Definitions" (40 CFR 62.15410).

(b) You must not operate your municipal waste combustion unit so that the temperature at the inlet of the particulate matter control device exceeds 17 °C above the maximum demonstrated temperature of the particulate matter control device (4-hour block average), as specified under "Definitions" (40 CFR 62.15410).

(c) You must maintain an 8-hour block average carbon feed rate at or above the highest average level established during the most recent dioxins/furans or mercury test.

(d) You must evaluate total carbon usage for each calendar quarter. The total amount of carbon purchased and delivered to your municipal waste combustion plant must be at or above the required quarterly usage of carbon. At your option, you may choose to evaluate required quarterly carbon usage on a municipal waste combustion unit basis for each individual municipal waste combustion unit at your plant. Calculate the required quarterly usage of carbon using the appropriate equation in 40 CFR 62.15390.

(e) Your municipal waste combustion unit is exempt from limits on load level, temperature at the inlet of the particulate matter control device, and carbon feed rate during any of five situations:

(1) During your annual tests for dioxins/furans.

(2) During your annual mercury tests (for carbon feed rate requirements only).

(3) During the 2 weeks preceding your annual tests for dioxins/furans.

(4) During the 2 weeks preceding your annual mercury tests (for carbon feed rate requirements only).

(5) Whenever the Administrator permits you to do any of five activities:

(i) Evaluate system performance.

(ii) Test new technology or control technologies.

(iii) Perform diagnostic testing.

(iv) Perform other activities to improve the performance of your municipal waste combustion unit.

(v) Perform other activities to advance the state of the art for emission controls for your municipal waste combustion unit.

A. Stack S10: Processes I40 & I41 – Two Consumat dual chambered, stepped hearth, modular starved air municipal waste combustion units with energy recovery, combined combustion capacity of 100 tons per day to be increased to 150 tons per day under 20-BAP-152
Control Device C01 – Acid gas removal system consisting of a lime and powder activated carbon flue gas injection system to be upgraded to a circulating fluid bed scrubber and two cyclones under 20-BAP-152
Control Device C02 – Baghouse

7. Federal Plan Requirements for Small Municipal Waste Combustion Units Constructed on or Before August 30, 1999. [40 CFR Part 62, Subpart JJJ, as last amended 01/31/2003]

The permit condition numbers in this section of the permit are the associated provision numbers from the relevant standard as they appear in the above referenced Part and Subpart of Title 40 of the Code of Federal Regulations. References to provisions of 40 CFR contained within the permit conditions reference permit conditions with the same number as the referenced provision.

a. Requirements

[40 CFR 62.15145; s. 285.65(13), Wis. Stats.]

(62.15150) *Operating requirements during periods of startup, shutdown, and malfunction*

(a) The operating requirements of this subpart apply at all times except during periods of municipal waste combustion unit startup, shutdown, or malfunction.

(b) Each startup, shutdown, or malfunction must not last for longer than 3 hours.

[40 CFR 62.15150; s. 285.65(13), Wis. Stats.]

(62.15155) *Pollutants regulated by subpart JJJ*

Eleven pollutants, in four groupings, are regulated:

(a) *Organics.* Dioxins/furans.

(b) *Metals.*

(1) Cadmium.

(2) Lead.

(3) Mercury.

(4) Opacity.

(5) Particulate matter.

(c) *Acid gases.*

(1) Hydrogen chloride.

(2) Nitrogen oxides.

(3) Sulfur dioxide.

(d) *Other.*

(1) Carbon monoxide.

(2) Fugitive ash.

[40 CFR 62.15155; s. 285.65(13), Wis. Stats.]

A. Stack S10: Processes I40 & I41 – Two Consumat dual chambered, stepped hearth, modular starved air municipal waste combustion units with energy recovery, combined combustion capacity of 100 tons per day to be increased to 150 tons per day under 20-BAP-152
Control Device C01 – Acid gas removal system consisting of a lime and powder activated carbon flue gas injection system to be upgraded to a circulating fluid bed scrubber and two cyclones under 20-BAP-152
Control Device C02 – Baghouse

7. Federal Plan Requirements for Small Municipal Waste Combustion Units Constructed on or Before August 30, 1999. [40 CFR Part 62, Subpart JJJ, as last amended 01/31/2003]

The permit condition numbers in this section of the permit are the associated provision numbers from the relevant standard as they appear in the above referenced Part and Subpart of Title 40 of the Code of Federal Regulations. References to provisions of 40 CFR contained within the permit conditions reference permit conditions with the same number as the referenced provision.

a. Requirements

(62.15160) *Emission limits*

(a) You must meet the applicable emission limits specified in tables 4 and 5 of 40 CFR part 62, subpart JJJ:

(1) *[Intentionally left blank]*

(2) For Class II units, see table 4 of 40 CFR part 62, subpart JJJ.

Table 4 to Subpart JJJ of Part 62 – Class II Emission Limits for Existing Small Municipal Waste Combustion Units [a]

For the following pollutants	You must meet the following emission limits [b]	Using these averaging times	And determine compliance by these methods
1. Organics			
Dioxins/Furans (total mass basis)	125 nanograms per dry standard cubic meter	3-run average (minimum run duration is 4 hours)	Stack test.
2. Metals:			
Cadmium	0.10 milligrams per dry standard cubic meter	3-run average (run duration specified in test method)	Stack test.
Lead	1.6 milligrams per dry standard cubic meter	3-run average (run duration specified in test method)	Stack test.
Mercury	0.080 milligrams per dry standard cubic meter or 85 percent reduction of potential mercury emissions	3-run average (run duration specified in test method)	Stack test.
Opacity	10 percent	Thirty 6-minute averages	Stack test.

A. Stack S10: Processes I40 & I41 – Two Consumat dual chambered, stepped hearth, modular starved air municipal waste combustion units with energy recovery, combined combustion capacity of 100 tons per day to be increased to 150 tons per day under 20-BAP-152
Control Device C01 – Acid gas removal system consisting of a lime and powder activated carbon flue gas injection system to be upgraded to a circulating fluid bed scrubber and two cyclones under 20-BAP-152
Control Device C02 – Baghouse

7. Federal Plan Requirements for Small Municipal Waste Combustion Units Constructed on or Before August 30, 1999. [40 CFR Part 62, Subpart JJJ, as last amended 01/31/2003]

The permit condition numbers in this section of the permit are the associated provision numbers from the relevant standard as they appear in the above referenced Part and Subpart of Title 40 of the Code of Federal Regulations. References to provisions of 40 CFR contained within the permit conditions reference permit conditions with the same number as the referenced provision.

a. Requirements

Particulate Matter	70 milligrams per dry standard cubic meter	3-run average (run duration specified in test method)	Stack test.
3. Acid Gases:			
Hydrogen Chloride	250 parts per million by dry volume or 50 percent reduction of potential hydrogen chloride emissions	3-run average (minimum run duration is 1 hour)	Stack test
Nitrogen Oxides (Class II units)[c]	500 parts per million by dry volume	See footnote c	See footnote c
Sulfur Dioxide	77 parts per million by dry volume or 50 percent reduction of potential sulfur dioxide emissions	24-hour daily block geometric average concentration or percent reduction	Continuous monitoring emission system.
4. Other:			
Fugitive Ash	Visible emissions for no more than 5 percent of hourly observation period	Three 1-hour observation periods	Visible emission test.

[a] Class II units mean small municipal waste combustion units subject to 40 CFR part 62, subpart JJJ, that are located at municipal waste combustion plants with an aggregate plant combustion capacity less than or equal to 250 tons per day of municipal solid waste. See 40 CFR 62.15410 for definitions.
[b] All emission limits (except for opacity) are measured at 7 percent oxygen.

A. Stack S10: Processes I40 & I41 – Two Consumat dual chambered, stepped hearth, modular starved air municipal waste combustion units with energy recovery, combined combustion capacity of 100 tons per day to be increased to 150 tons per day under 20-BAP-152
Control Device C01 – Acid gas removal system consisting of a lime and powder activated carbon flue gas injection system to be upgraded to a circulating fluid bed scrubber and two cyclones under 20-BAP-152
Control Device C02 – Baghouse

7. Federal Plan Requirements for Small Municipal Waste Combustion Units Constructed on or Before August 30, 1999. [40 CFR Part 62, Subpart JJJ, as last amended 01/31/2003]

The permit condition numbers in this section of the permit are the associated provision numbers from the relevant standard as they appear in the above referenced Part and Subpart of Title 40 of the Code of Federal Regulations. References to provisions of 40 CFR contained within the permit conditions reference permit conditions with the same number as the referenced provision.

a. Requirements

[c] No monitoring, testing, recordkeeping, or reporting is required to demonstrate compliance with the nitrogen oxides limit for Class II units.

(3) For carbon monoxide emission limits for both classes of units, see table 5 of 40 CFR part 62 subpart, subpart JJJ.

Table 5 to Subpart JJJ of Part 62 – Carbon Monoxide Emission Limits for Existing Small Municipal Waste Combustion Units

For these municipal waste combustion units	You must meet the carbon monoxide limits [a]	Using these averaging times [b]
7. Modular starved-air and excess air	50 parts per million by dry volume	4-hour.

[a] All limits (except for opacity) are measured at 7 percent oxygen. Compliance is determined by continuous emission monitoring systems.
[b] Block averages, arithmetic mean. See 40 CFR 62.15410 for definitions.

(b) *[Intentionally left blank]*

[40 CFR 62.15160, table 4 to 40 CFR part 62, subpart JJJ, and item 7 from table 5 to 40 CFR part 62, subpart JJJ; s. 285.65(13), Wis. Stats.]

(62.15165) *Emission limits during periods of startup, shutdown, and malfunction*

(a) The emission limits of 40 CFR part 62, subpart JJJ, apply at all times except during periods of municipal waste combustion unit startup, shutdown, or malfunction.

(b) Each startup, shutdown, or malfunction must not last for longer than 3 hours.

(c) A maximum of 3 hours of test data can be dismissed from compliance calculations during periods of startup, shutdown, or malfunction.

(d) During startup, shutdown, or malfunction periods longer than 3 hours, emissions data cannot be discarded from compliance calculations and all provisions under 40 CFR 60.11(d) of subpart A of 40 CFR part 60 apply.

[40 CFR 62.15165; s. 285.65(13), Wis. Stats.]

(62.15170) *Types of continuous emission monitoring that must be performed*

To continuously monitor emissions, you must perform four tasks:

(a) Install continuous emission monitoring systems for certain gaseous pollutants.

(b) Make sure your continuous emission monitoring systems are operating correctly.

(c) Make sure you obtain the minimum amount of monitoring data.

A. Stack S10: Processes I40 & I41 – Two Consumat dual chambered, stepped hearth, modular starved air municipal waste combustion units with energy recovery, combined combustion capacity of 100 tons per day to be increased to 150 tons per day under 20-BAP-152
Control Device C01 – Acid gas removal system consisting of a lime and powder activated carbon flue gas injection system to be upgraded to a circulating fluid bed scrubber and two cyclones under 20-BAP-152
Control Device C02 – Baghouse

7. Federal Plan Requirements for Small Municipal Waste Combustion Units Constructed on or Before August 30, 1999. [40 CFR Part 62, Subpart JJJ, as last amended 01/31/2003]

The permit condition numbers in this section of the permit are the associated provision numbers from the relevant standard as they appear in the above referenced Part and Subpart of Title 40 of the Code of Federal Regulations. References to provisions of 40 CFR contained within the permit conditions reference permit conditions with the same number as the referenced provision.

a. Requirements

(d) Install a continuous opacity monitoring system.

[40 CFR 62.15170; s. 285.65(13), Wis. Stats.]

(62.15175) *Continuous emission monitoring systems for gaseous pollutants*

(a) You must install, calibrate, maintain, and operate continuous emission monitoring systems for oxygen (or carbon dioxide), sulfur dioxide, and carbon monoxide. Install the continuous emission monitoring system for sulfur dioxide and oxygen (or carbon dioxide) at the outlet of the air pollution control device.

(b) You must install, evaluate, and operate each continuous emission monitoring system according to the "Monitoring Requirements" in s. 60.13 of subpart A of 40 CFR part 60.

(c) You must monitor the oxygen (or carbon dioxide) concentration at each location where you monitor sulfur dioxide and carbon monoxide.

(d)-(f) *[Intentionally left blank]*

[40 CFR 62.15175(a)-(c); s. 285.65(13), Wis. Stats.]

(62.15180) *How to use the data from the continuous emission monitoring systems*

You must use data from the continuous emission monitoring systems for sulfur dioxide and carbon monoxide to demonstrate continuous compliance with the applicable emission limits specified in tables 4 and 5 of 40 CFR part 62, subpart JJJ. To demonstrate compliance for dioxins/furans, cadmium, lead, mercury, particulate matter, opacity, hydrogen chloride, and fugitive ash, see 40 CFR 62.15235.

[40 CFR 62.15180; s. 285.65(13), Wis. Stats.]

(62.15185) *How to ensure the continuous emission monitoring systems are operating correctly*

(a) Conduct initial, daily, quarterly, and annual evaluations of your continuous emission monitoring systems that measure oxygen (or carbon dioxide), sulfur dioxide, and carbon monoxide.

(b) Complete your initial evaluation of the continuous emission monitoring systems within 180 days after your final compliance date.

(c) For initial and annual evaluations, collect data concurrently (or within 30 to 60 minutes) using your oxygen (or carbon dioxide) continuous emission monitoring system, your sulfur dioxide, or carbon monoxide continuous emission monitoring systems, as appropriate, and the appropriate test methods specified in table 6 of 40 CFR part 62, subpart JJJ. Collect these data during each initial and annual evaluation of your continuous emission monitoring systems following the applicable performance specifications in appendix B of 40 CFR part 60. Table 7 of 40 CFR part 62, subpart JJJ, shows the performance specifications that apply to each continuous emission monitoring system.

A. Stack S10: Processes I40 & I41 – Two Consumat dual chambered, stepped hearth, modular starved air municipal waste combustion units with energy recovery, combined combustion capacity of 100 tons per day to be increased to 150 tons per day under 20-BAP-152
Control Device C01 – Acid gas removal system consisting of a lime and powder activated carbon flue gas injection system to be upgraded to a circulating fluid bed scrubber and two cyclones under 20-BAP-152
Control Device C02 – Baghouse

7. Federal Plan Requirements for Small Municipal Waste Combustion Units Constructed on or Before August 30, 1999. [40 CFR Part 62, Subpart JJJ, as last amended 01/31/2003]

The permit condition numbers in this section of the permit are the associated provision numbers from the relevant standard as they appear in the above referenced Part and Subpart of Title 40 of the Code of Federal Regulations. References to provisions of 40 CFR contained within the permit conditions reference permit conditions with the same number as the referenced provision.

a. Requirements

Table 6 to Subpart JJJ of Part 62 – Requirements for Validating Continuous Emission Monitoring Systems (CEMS)

For these continuous emission monitoring systems	Use the following methods in appendix A of this part to validate pollutant concentration levels	Use these methods to measure oxygen (or carbon dioxide) [a]
2. Sulfur Dioxide	Method 6 or 6C	Method 3 or 3A.
3. Carbon Monoxide	Method 10, 10A, or 10B	Method 3 or 3A.

[a] Methods are in Appendix A of 40 CFR part 60.

Table 4 to Subpart AAAA of Part 60 – Requirements for Continuous Emission Monitoring Systems (CEMS)

For these pollutants	Use these span values for your CEMS	Use these performance specifications for your CEMS (from appendix B of 40 CFR part 60)	If needed to meet minimum data requirements, use these alternate methods to collect data
1. Opacity	100 percent opacity	P.S. 1	Method 9.
3. Sulfur Dioxide	Inlet to control device: 125 percent of the maximum expected hourly potential sulfur dioxide emissions of the municipal waste combustion unit. Control device outlet: 50 percent of the maximum expected hourly potential sulfur dioxide emissions of the municipal waste combustion unit	P.S. 2	Method 6C.
4. Carbon Monoxide	125 percent of the maximum expected hourly potential carbon with monoxide emissions of the municipal waste combustion unit	P.S. 4A	Method 10 alternative interference trap.
5. Oxygen or Carbon Dioxide	25 percent oxygen or 25 percent carbon dioxide	P.S. 3	Method 3A or 3B.

[a] Methods are in Appendix A of 40 CFR part 60.

A. Stack S10: Processes I40 & I41 – Two Consumat dual chambered, stepped hearth, modular starved air municipal waste combustion units with energy recovery, combined combustion capacity of 100 tons per day to be increased to 150 tons per day under 20-BAP-152
Control Device C01 – Acid gas removal system consisting of a lime and powder activated carbon flue gas injection system to be upgraded to a circulating fluid bed scrubber and two cyclones under 20-BAP-152
Control Device C02 – Baghouse

7. Federal Plan Requirements for Small Municipal Waste Combustion Units Constructed on or Before August 30, 1999. [40 CFR Part 62, Subpart JJJ, as last amended 01/31/2003]

The permit condition numbers in this section of the permit are the associated provision numbers from the relevant standard as they appear in the above referenced Part and Subpart of Title 40 of the Code of Federal Regulations. References to provisions of 40 CFR contained within the permit conditions reference permit conditions with the same number as the referenced provision.

a. Requirements

(d) Follow the quality assurance procedures in Procedure 1 of appendix F of 40 CFR part 60 for each continuous emission monitoring system. These procedures include daily calibration drift and quarterly accuracy determinations.

[40 CFR 62.15185, items 1 and 3 from table 6 and items 1 and 3-5 from table 7 of 40 CFR part 62, subpart JJJ; s. 285.65(13), Wis. Stats.]

(62.15190) *Exemption from 40 CFR part 60 appendix B or appendix F requirements to evaluate continuous emission monitoring systems*
The accuracy tests for your sulfur dioxide continuous emission monitoring system require you to also evaluate your oxygen (or carbon dioxide) continuous emission monitoring system. Therefore, your oxygen (or carbon dioxide) continuous emission monitoring system is exempt from two requirements:

(a) Section 2.3 of Performance Specification 3 in appendix B of 40 CFR part 60 (relative accuracy requirement).

(b) Section 5.1.1 of appendix F of 40 CFR part 60 (relative accuracy test audit).

[40 CFR 62.15190; s. 285.65(13), Wis. Stats.]

(62.15195) *Schedule for evaluating continuous emission monitoring systems*

(a) Conduct annual evaluations of your continuous emission monitoring systems no more than 13 months after the previous evaluation was conducted.

(b) Evaluate your continuous emission monitoring systems daily and quarterly as specified in appendix F of 40 CFR part 60.

[40 CFR 62.15195; s. 285.65(13), Wis. Stats.]

(62.15200) *[Intentionally left blank]*

[40 CFR 62.15200; s. 285.65(13), Wis. Stats.]

(62.15205) *Minimum amount of monitoring data that must be collected with the continuous emission monitoring systems*

(a) Where continuous emission monitoring systems are required, obtain 1-hour arithmetic averages. Make sure the averages for sulfur dioxide and carbon monoxide are in parts per million by dry volume at 7 percent oxygen (or the equivalent carbon dioxide level). Use the 1-hour averages of oxygen (or carbon dioxide) data from your continuous emission monitoring system to determine the actual oxygen (or carbon dioxide) level and to calculate emissions at 7 percent oxygen (or the equivalent carbon dioxide level).

(b) Obtain at least two data points per hour in order to calculate a valid 1-hour arithmetic average. Section 60.13(e)(2) of subpart A of 40 CFR part 60 requires your continuous emission monitoring systems to complete at least one cycle of operation (sampling, analyzing, and data recording) for each 15-minute period.

(c) Obtain valid 1-hour averages for 75 percent of the operating hours per day for 90 percent of the operating days per calendar quarter. An operating day is any day the unit combusts any municipal solid waste or refuse-derived fuel.

A. Stack S10: Processes I40 & I41 – Two Consumat dual chambered, stepped hearth, modular starved air municipal waste combustion units with energy recovery, combined combustion capacity of 100 tons per day to be increased to 150 tons per day under 20-BAP-152
Control Device C01 – Acid gas removal system consisting of a lime and powder activated carbon flue gas injection system to be upgraded to a circulating fluid bed scrubber and two cyclones under 20-BAP-152
Control Device C02 – Baghouse

7. Federal Plan Requirements for Small Municipal Waste Combustion Units Constructed on or Before August 30, 1999. [40 CFR Part 62, Subpart JJJ, as last amended 01/31/2003]

The permit condition numbers in this section of the permit are the associated provision numbers from the relevant standard as they appear in the above referenced Part and Subpart of Title 40 of the Code of Federal Regulations. References to provisions of 40 CFR contained within the permit conditions reference permit conditions with the same number as the referenced provision.

a. Requirements

(d) If you do not obtain the minimum data required in paragraphs (a) through (c) of this section, you are in violation of this data collection requirement regardless of the emission level monitored, and you must notify the Administrator according to 40 CFR 62.15340(e).

(e) If you do not obtain the minimum data required in paragraphs (a) through (c) of this section, you must still use all valid data from the continuous emission monitoring systems in calculating emission concentrations and percent reductions in accordance with 40 CFR 62.15210.

[40 CFR 62.15205; s. 285.65(13), Wis. Stats.]

(62.15210) *How to convert 1-hour arithmetic averages into appropriate averaging times and units*

(a) Use the equation in 40 CFR 62.15390(a) to calculate emissions at 7 percent oxygen.

(b) Use EPA Reference Method 19 in appendix A of 40 CFR part 60, section 4.3, to calculate the daily geometric average concentrations of sulfur dioxide emissions.

(c) *[Intentionally left blank]*

(d) Use EPA Reference Method 19, section 4.1, to calculate the 4-hour or 24-hour daily block averages (as applicable) for concentrations of carbon monoxide.

[40 CFR 62.15210; s. 285.65(13), Wis. Stats.]

(62.15215) *Requirements for continuous opacity monitoring systems and data use*

(a) Install, calibrate, maintain, and operate a continuous opacity monitoring system.

(b) Install, evaluate, and operate each continuous opacity monitoring system according to s. 60.13 of subpart A 40 CFR part 60.

(c) Complete an initial evaluation of your continuous opacity monitoring system according to Performance Specification 1 in appendix B of 40 CFR part 60. Complete this evaluation by 180 days after your final compliance date.

(d) Complete each annual evaluation of your continuous opacity monitoring system no more than 13 months after the previous evaluation.

(e) Use tests conducted according to EPA Reference Method 9, as specified in 40 CFR 62.15245, to determine compliance with the applicable opacity limit in table 4 of 40 CFR part 62, subpart JJJ. The data obtained from your continuous opacity monitoring system are not used to determine compliance with the opacity limit.

[40 CFR 62.15215; s. 285.65(13), Wis. Stats.]

(62.15220) *Additional requirements for the operation of the continuous emission monitoring systems and continuous opacity monitoring system*
Use the required span values and applicable performance specifications in table 8 of 40 CFR part 62, subpart JJJ.

Table 8 to Subpart JJJ of Part 62 – Requirements for Stack Tests

To measure these pollutants	Use these methods to determine the sampling location [a]	Use these methods to measure pollutant concentration [a]	Also note the following additional information
1. Organics:			
Dioxins/Furans	Method 1	Method 23 [b]	The minimum sampling time must be 4 hours per test run while the municipal waste combustion unit is operating at full load.
2. Metals:			
Cadmium	Method 1	Method 29 [b]	Compliance testing must be performed while the municipal waste combustion unit is operating at full load.
Lead	Method 1	Method 29 [b]	Compliance testing must be performed while the municipal waste combustion unit is operating at full load.
Mercury	Method 1	Method 29 [b]	Compliance testing must be performed while the municipal waste combustion unit is operating at full load.
Opacity	Method 9	Method 9	Use Method 9 to determine compliance with opacity limit. 3-hour observation period (thirty 6-minute averages).
Particulate Matter	Method 1	Method 5 or 29 [b]	The minimum sample volume must be 1.0 cubic meters. The probe and filter holder heating systems in the sample train must be set to provide a gas temperature no greater than 160 ±14 °C. The minimum sampling time is 1 hour.
3. Acid Gases: [c]			
Hydrogen Chloride	Method 1	Method 26 or 26A [b]	Test runs must be at least 1 hour long while the municipal waste combustion unit is operating at full load.
4. Other: [c]			
Fugitive Ash	Not applicable	Method 22 (visible emissions)	The three 1-hour observation period must include periods when the facility transfers fugitive ash from

A. Stack S10: Processes I40 & I41 – Two Consumat dual chambered, stepped hearth, modular starved air municipal waste combustion units with energy recovery, combined combustion capacity of 100 tons per day to be increased to 150 tons per day under 20-BAP-152
Control Device C01 – Acid gas removal system consisting of a lime and powder activated carbon flue gas injection system to be upgraded to a circulating fluid bed scrubber and two cyclones under 20-BAP-152
Control Device C02 – Baghouse

7. Federal Plan Requirements for Small Municipal Waste Combustion Units Constructed on or Before August 30, 1999. [40 CFR Part 62, Subpart JJJ, as last amended 01/31/2003]

The permit condition numbers in this section of the permit are the associated provision numbers from the relevant standard as they appear in the above referenced Part and Subpart of Title 40 of the Code of Federal Regulations. References to provisions of 40 CFR contained within the permit conditions reference permit conditions with the same number as the referenced provision.

a. Requirements

			the municipal waste combustion unit to the area where the fugitive ash is stored or loaded into containers or trucks.

[a] Methods are in Appendix A of 40 CFR part 60.
[b] Must simultaneously measure oxygen (or carbon dioxide) using Method 3A or 3B.
[c] Use CEMS to test sulfur dioxide and carbon monoxide. Stack tests are not required except for appendix F quality assurance requirements.

[40 CFR 62.15220, table 8 to 40 CFR part 62, subpart JJJ; s. 285.65(13), Wis. Stats.]

(62.15225) *Requirements when a continuous emission monitoring system is temporarily unavailable to meet the data collection requirements*
Refer to table 8 of 40 CFR part 62, subpart JJJ. It shows alternate methods for collecting data when these systems malfunction or when repairs, calibration checks, or zero and span checks keep you from collecting the minimum amount of data.

[40 CFR 62.15225; s. 285.65(13), Wis. Stats.]

(62.15230) *Types of stack tests that must be conducted*
Conduct initial and annual stack tests to measure the emission levels of dioxins/furans, cadmium, lead, mercury, particulate matter, opacity, hydrogen chloride, and fugitive ash.

[40 CFR 62.15230; s. 285.65(13), Wis. Stats.]

(62.15235) *Use of the stack test data*
You must use results of stack tests for dioxins/furans, cadmium, lead, mercury, particulate matter, opacity, hydrogen chloride, and fugitive ash to demonstrate compliance with the applicable emission limits in tables 2 and 4 of 40 CFR part 62, subpart JJJ. To demonstrate compliance for carbon monoxide, nitrogen oxides, and sulfur dioxide, see 40 CFR 62.15180.

[40 CFR 62.15235; s. 285.65(13), Wis. Stats.]

(62.15240) *Schedule for stack testing*

(a) Conduct initial stack tests for the pollutants listed in 40 CFR 62.15230 by 180 days after your final compliance date.

(b) Conduct annual stack tests for these pollutants after the initial stack test. Conduct each annual stack test no later than 13 months after the previous stack test.

[40 CFR 62.15240; s. 285.65(13), Wis. Stats.]

A. Stack S10: Processes I40 & I41 – Two Consumat dual chambered, stepped hearth, modular starved air municipal waste combustion units with energy recovery, combined combustion capacity of 100 tons per day to be increased to 150 tons per day under 20-BAP-152
Control Device C01 – Acid gas removal system consisting of a lime and powder activated carbon flue gas injection system to be upgraded to a circulating fluid bed scrubber and two cyclones under 20-BAP-152
Control Device C02 – Baghouse

7. Federal Plan Requirements for Small Municipal Waste Combustion Units Constructed on or Before August 30, 1999. [40 CFR Part 62, Subpart JJJ, as last amended 01/31/2003]

The permit condition numbers in this section of the permit are the associated provision numbers from the relevant standard as they appear in the above referenced Part and Subpart of Title 40 of the Code of Federal Regulations. References to provisions of 40 CFR contained within the permit conditions reference permit conditions with the same number as the referenced provision.

a. Requirements

(62.15245) *Test methods for stack tests*

(a) Follow table 8 of 40 CFR part 62, subpart JJJ, to establish the sampling location and to determine pollutant concentrations, number of traverse points, individual test methods, and other specific testing requirements for the different pollutants.

(b) Make sure that stack tests for all these pollutants consist of at least three test runs, as specified in 40 CFR 60.8 (Performance Tests) of subpart A of 40 CFR part 60. Use the average of the pollutant emission concentrations from the three test runs to determine compliance with the applicable emission limits in table 4 of 40 CFR part 62, subpart JJJ.

(c) Obtain an oxygen (or carbon dioxide) measurement at the same time as your pollutant measurements to determine diluent gas levels, as specified in 40 CFR 62.15175.

(d) Use the equations in 40 CFR 62.15390(a) to calculate emission levels at 7 percent oxygen (or an equivalent carbon dioxide basis), the percent reduction in potential hydrogen chloride emissions, and the reduction efficiency for mercury emissions. See the individual test methods in table 6 of 40 CFR part 62, subpart JJJ, for other required equations.

(e) You can apply to the Administrator for approval under s. 60.8(b) of subpart A of 40 CFR part 60 to

(1) Use a reference method with minor changes in methodology;

(2) Use an equivalent method;

(3) Use an alternative method the results of which the Administrator has determined are adequate for demonstrating compliance;

(4) Waive the requirement for a performance test because you have demonstrated by other means that you are in compliance; or

(5) Use a shorter sampling time or smaller sampling volume.

[40 CFR 62.15245; s. 285.65(13), Wis. Stats.]

(62.15250) *Requirements for conducting stack testing less often*

(a) You may test less often if all stack tests for a given pollutant over 3 consecutive years show you comply with the emission limit. In this case, you are not required to conduct a stack test for that pollutant for the next 2 years. However, you must conduct another stack test within 36 months of the anniversary date of the third consecutive stack test that shows you comply with the emission limit. Thereafter, you must perform stack tests every third year but no later than 36 months following the previous stack tests. If a stack test shows noncompliance with an emission limit, you must conduct annual stack tests for that pollutant until all stack tests over 3 consecutive years show compliance with the emission limit for that pollutant. This provision applies to all pollutants subject to stack testing requirements: dioxins/furans, cadmium, lead, mercury, particulate matter, opacity, hydrogen chloride, and fugitive ash.

A. Stack S10: Processes I40 & I41 – Two Consumat dual chambered, stepped hearth, modular starved air municipal waste combustion units with energy recovery, combined combustion capacity of 100 tons per day to be increased to 150 tons per day under 20-BAP-152
Control Device C01 – Acid gas removal system consisting of a lime and powder activated carbon flue gas injection system to be upgraded to a circulating fluid bed scrubber and two cyclones under 20-BAP-152
Control Device C02 – Baghouse

7. Federal Plan Requirements for Small Municipal Waste Combustion Units Constructed on or Before August 30, 1999. [40 CFR Part 62, Subpart JJJ, as last amended 01/31/2003]

The permit condition numbers in this section of the permit are the associated provision numbers from the relevant standard as they appear in the above referenced Part and Subpart of Title 40 of the Code of Federal Regulations. References to provisions of 40 CFR contained within the permit conditions reference permit conditions with the same number as the referenced provision.

a. Requirements

(b) You can test less often for dioxins/furans emissions if all the municipal waste combustion units onsite have demonstrated levels of dioxins/furans emissions less than or equal to 30 nanograms per dry standard cubic meter (total mass), for 2 consecutive years. In this case, you may choose to conduct annual stack tests on only one municipal waste combustion unit per year at your plant. This provision only applies to stack testing for dioxins/furans emissions.

(1) Conduct the stack test no more than 13 months following a stack test on any municipal waste combustion unit subject to this subpart at your plant. Each year, test a different municipal waste combustion unit subject to this subpart and test all municipal waste combustion units subject to this subpart in a sequence that you determine. Once you determine a testing sequence, it must not be changed without approval by the Administrator.

(2) If each annual stack test shows levels of dioxins/furans emissions less than or equal to 30 nanograms per dry standard cubic meter (total mass) for Class II units, you may continue stack tests on only one municipal waste combustion unit subject to this subpart per year.

(3) If any annual stack test indicates levels of dioxins/furans emissions greater than 30 nanograms per dry standard cubic meter (total mass), conduct subsequent annual stack tests on all municipal waste combustion units subject to this subpart at your plant. You may return to testing one municipal waste combustion unit subject to this subpart per year if you can demonstrate dioxins/furans emission levels less than or equal to 30 nanograms per dry standard cubic meter (total mass), for all municipal waste combustion units at your plant subject to this subpart for 2 consecutive years.

[40 CFR 62.15250; s. 285.65(13), Wis. Stats.]

(62.15255) *Deviating from the 13-month testing schedule if unforeseen circumstances arise*
You may not deviate from the 13-month testing schedules specified in 40 CFR 62.15240(b) and 62.15250(b)(1) unless you apply to the Administrator for an alternative schedule, and the Administrator approves your request for alternate scheduling prior to the date on which you would otherwise have been required to conduct the next stack test.

[40 CFR 62.15255; s. 285.65(13), Wis. Stats.]

(62.15260) *Other requirements for continuous monitoring*
You must also monitor three operating parameters:

(a) Load level of each municipal waste combustion unit.

(b) Temperature of flue gases at the inlet of your particulate matter air pollution control device.

(c) Carbon feed rate.

[40 CFR 62.15260; s. 285.65(13), Wis. Stats.]

A. Stack S10: Processes I40 & I41 – Two Consumat dual chambered, stepped hearth, modular starved air municipal waste combustion units with energy recovery, combined combustion capacity of 100 tons per day to be increased to 150 tons per day under 20-BAP-152
Control Device C01 – Acid gas removal system consisting of a lime and powder activated carbon flue gas injection system to be upgraded to a circulating fluid bed scrubber and two cyclones under 20-BAP-152
Control Device C02 – Baghouse

7. Federal Plan Requirements for Small Municipal Waste Combustion Units Constructed on or Before August 30, 1999. [40 CFR Part 62, Subpart JJJ, as last amended 01/31/2003]

The permit condition numbers in this section of the permit are the associated provision numbers from the relevant standard as they appear in the above referenced Part and Subpart of Title 40 of the Code of Federal Regulations. References to provisions of 40 CFR contained within the permit conditions reference permit conditions with the same number as the referenced provision.

a. Requirements

(62.15265) *How to monitor the load of the municipal waste combustion unit*

(a) You must install, calibrate, maintain, and operate a steam flowmeter and meet five requirements:

(1) Continuously measure and record the measurements of steam (or feed water) in kilograms per hour (or pounds per hour).

(2) Calculate your steam flow in 4-hour block averages.

(3) Calculate the steam flow rate using the method in "American Society of Mechanical Engineers (ASME PTC 4.1—1964): Test Code for Steam Generating Units, Power Test Code 4.1-1964 (Reaffirmed 1991)," section 4.

(4) Design, construct, install, calibrate, and use nozzles or orifices for flow rate measurements, using the recommendations in "American Society of Mechanical Engineers Interim Supplement 19.5 on Instruments and Apparatus: Application, Part II of Fluid Meters", 6th Edition (1971), chapter 4.

(5) Before each dioxins/furans stack test, or at least once a year, calibrate all signal conversion elements associated with steam flow measurements according to the manufacturer instructions.

(b) *[Intentionally left blank]*

[40 CFR 62.15265(a); s. 285.65(13), Wis. Stats.]

(62.15270) *Monitoring the temperature of flue gases at the inlet of the particulate matter control device*

You must install, calibrate, maintain, and operate a device to continuously measure the temperature of the flue gas stream at the inlet of each particulate matter control device.

[40 CFR 62.15270; s. 285.65(13), Wis. Stats.]

(62.15275) *Monitoring the injection rate of activated carbon*

You must meet three requirements:

(a) Select a carbon injection system operating parameter that can be used to calculate carbon feed rate (for example, screw feeder speed).

(b) During each dioxins/furans and mercury stack test, determine the average carbon feed rate in kilograms (or pounds) per hour. Also, determine the average operating parameter level that correlates to the carbon feed rate. Establish a relationship between the operating parameter and the carbon feed rate in order to calculate the carbon feed rate based on the operating parameter level.

(c) Continuously monitor the selected operating parameter during all periods when the municipal waste combustion unit is operating and combusting waste and calculate the 8-hour block average carbon feed rate in kilograms (or pounds) per hour, based on the selected operating parameter. When calculating the 8-hour block average, do two things:

A. Stack S10: Processes I40 & I41 – Two Consumat dual chambered, stepped hearth, modular starved air municipal waste combustion units with energy recovery, combined combustion capacity of 100 tons per day to be increased to 150 tons per day under 20-BAP-152
Control Device C01 – Acid gas removal system consisting of a lime and powder activated carbon flue gas injection system to be upgraded to a circulating fluid bed scrubber and two cyclones under 20-BAP-152
Control Device C02 – Baghouse

7. Federal Plan Requirements for Small Municipal Waste Combustion Units Constructed on or Before August 30, 1999. [40 CFR Part 62, Subpart JJJ, as last amended 01/31/2003]

The permit condition numbers in this section of the permit are the associated provision numbers from the relevant standard as they appear in the above referenced Part and Subpart of Title 40 of the Code of Federal Regulations. References to provisions of 40 CFR contained within the permit conditions reference permit conditions with the same number as the referenced provision.

a. Requirements

(1) Exclude hours when the municipal waste combustion unit is not operating.

(2) Include hours when the municipal waste combustion unit is operating but the carbon feed system is not working correctly.

[40 CFR 62.15275; s. 285.65(13), Wis. Stats.]

(62.15280) *Minimum amount of monitoring data that must be collected with the continuous parameter monitoring systems*

(a) Where continuous parameter monitoring systems are used, obtain 1-hour arithmetic averages for three parameters:

(1) Load level of the municipal waste combustion unit.

(2) Temperature of the flue gases at the inlet of your particulate matter control device.

(3) Carbon feed rate if activated carbon is used to control dioxins/furans or mercury emissions.

(b) Obtain at least two data points per hour in order to calculate a valid 1-hour arithmetic average.

(c) Obtain valid 1-hour averages for at least 75 percent of the operating hours per day for 90 percent of the operating days per calendar quarter. An operating day is any day the unit combusts any municipal solid waste or refuse-derived fuel.

(d) If you do not obtain the minimum data required in paragraphs (a) through (c) of this section, you are in violation of this data collection requirement and you must notify the Administrator according to 40 CFR 62.15340(e).

[40 CFR 62.15280; s. 285.65(13), Wis. Stats.]

(62.15285) *Required records*

You must keep four types of records:

(a) Operator training and certification.

(b) Stack tests.

(c) Continuously monitored pollutants and parameters.

(d) Carbon feed rate.

[40 CFR 62.15285; s. 285.65(13), Wis. Stats.]

(62.15290) *Record retention and location*

(a) Keep all records onsite in paper copy or electronic format unless the Administrator approves another format.

A. Stack S10: Processes I40 & I41 – Two Consumat dual chambered, stepped hearth, modular starved air municipal waste combustion units with energy recovery, combined combustion capacity of 100 tons per day to be increased to 150 tons per day under 20-BAP-152
Control Device C01 – Acid gas removal system consisting of a lime and powder activated carbon flue gas injection system to be upgraded to a circulating fluid bed scrubber and two cyclones under 20-BAP-152
Control Device C02 – Baghouse

7. Federal Plan Requirements for Small Municipal Waste Combustion Units Constructed on or Before August 30, 1999. [40 CFR Part 62, Subpart JJJ, as last amended 01/31/2003]

The permit condition numbers in this section of the permit are the associated provision numbers from the relevant standard as they appear in the above referenced Part and Subpart of Title 40 of the Code of Federal Regulations. References to provisions of 40 CFR contained within the permit conditions reference permit conditions with the same number as the referenced provision.

a. Requirements

(b) Keep all records on each municipal waste combustion unit for at least 5 years.

(c) Make all records available for submittal to the Administrator, or for onsite review by an inspector.

[40 CFR 62.15290; s. 285.65(13), Wis. Stats.]

(62.15295) *Records for operator training and certification*
You must keep records of six items:

(a) *Records of provisional certifications.* Include three items:

(1) For your municipal waste combustion plant, names of the chief facility operator, shift supervisors, and control room operators who are provisionally certified by the American Society of Mechanical Engineers.

(2) Dates of the initial provisional certifications.

(3) Documentation showing current provisional certifications.

(b) *Records of full certifications.* Include three items:

(1) For your municipal waste combustion plant, names of the chief facility operator, shift supervisors, and control room operators who are fully certified by the American Society of Mechanical Engineers or an equivalent State-approved certification program.

(2) Dates of initial and renewal full certifications.

(3) Documentation showing current full certifications.

(c) *Records showing completion of the operator training course.* Include three items:

(1) For your municipal waste combustion plant, names of the chief facility operator, shift supervisors, and control room operators who have completed the EPA or State municipal waste combustion operator training course.

(2) Dates of completion of the operator training course.

(3) Documentation showing completion of operator training course.

(d) *Records of reviews for plant-specific operating manuals.* Include three items:

(1) Names of persons who have reviewed the operating manual.

(2) Date of the initial review.

(3) Dates of subsequent annual reviews.

(e) *Records of when a certified operator is temporarily offsite.* Include two main items:

A. Stack S10: Processes I40 & I41 – Two Consumat dual chambered, stepped hearth, modular starved air municipal waste combustion units with energy recovery, combined combustion capacity of 100 tons per day to be increased to 150 tons per day under 20-BAP-152
Control Device C01 – Acid gas removal system consisting of a lime and powder activated carbon flue gas injection system to be upgraded to a circulating fluid bed scrubber and two cyclones under 20-BAP-152
Control Device C02 – Baghouse

7. Federal Plan Requirements for Small Municipal Waste Combustion Units Constructed on or Before August 30, 1999. [40 CFR Part 62, Subpart JJJ, as last amended 01/31/2003]

The permit condition numbers in this section of the permit are the associated provision numbers from the relevant standard as they appear in the above referenced Part and Subpart of Title 40 of the Code of Federal Regulations. References to provisions of 40 CFR contained within the permit conditions reference permit conditions with the same number as the referenced provision.

a. Requirements

(1) If the certified chief facility operator and certified shift supervisor are offsite for more than 12 hours but for 2 weeks or less and no other certified operator is onsite, record the dates that the certified chief facility operator and certified shift supervisor were offsite.

(2) When all certified chief facility operators and certified shift supervisors are offsite for more than 2 weeks and no other certified operator is onsite, keep records of four items:

(i) Your notice that all certified persons are offsite.

(ii) The conditions that cause these people to be offsite.

(iii) The corrective actions you are taking to ensure a certified chief facility operator or certified shift supervisor is onsite.

(iv) Copies of the written reports submitted every 4 weeks that summarize the actions taken to ensure that a certified chief facility operator or certified shift supervisor will be onsite.

(f) *Records of calendar dates.* Include the calendar date on each record.

[40 CFR 62.15295; s. 285.65(13), Wis. Stats.]

(62.15300) *Records for stack tests*

For stack tests required under 40 CFR 62.15230, you must keep records of four items:

(a) The results of the stack tests for eight pollutants or parameters recorded in the appropriate units of measure specified in table 4 of 40 CFR part 62, subpart JJJ:

(1) Dioxins/furans.

(2) Cadmium.

(3) Lead.

(4) Mercury.

(5) Opacity.

(6) Particulate matter.

(7) Hydrogen chloride.

(8) Fugitive ash.

(b) Test reports including supporting calculations that document the results of all stack tests.

(c) The maximum demonstrated load of your municipal waste combustion units and maximum temperature at the inlet of your particulate matter control device during all stack tests for dioxins/furans emissions.

A. Stack S10: Processes I40 & I41 – Two Consumat dual chambered, stepped hearth, modular starved air municipal waste combustion units with energy recovery, combined combustion capacity of 100 tons per day to be increased to 150 tons per day under 20-BAP-152
Control Device C01 – Acid gas removal system consisting of a lime and powder activated carbon flue gas injection system to be upgraded to a circulating fluid bed scrubber and two cyclones under 20-BAP-152
Control Device C02 – Baghouse

7. Federal Plan Requirements for Small Municipal Waste Combustion Units Constructed on or Before August 30, 1999. [40 CFR Part 62, Subpart JJJ, as last amended 01/31/2003]

The permit condition numbers in this section of the permit are the associated provision numbers from the relevant standard as they appear in the above referenced Part and Subpart of Title 40 of the Code of Federal Regulations. References to provisions of 40 CFR contained within the permit conditions reference permit conditions with the same number as the referenced provision.

a. Requirements

(d) The calendar date of each record.

[40 CFR 62.15300; s. 285.65(13), Wis. Stats.]

(62.15305) *Records for continuously monitored pollutants or parameters*
You must keep records of eight items.

(a) *Records of monitoring data.* Document five parameters measured using continuous monitoring systems:

(1) All 6-minute average levels of opacity.

(2) All 1-hour average concentrations of sulfur dioxide emissions.

(3) *[Intentionally left blank]*

(4) All 1-hour average concentrations of carbon monoxide emissions.

(5) All 1-hour average load levels of your municipal waste combustion unit.

(6) All 1-hour average flue gas temperatures at the inlet of the particulate matter control device.

(b) *Records of average concentrations and percent reductions.* Document four parameters:

(1) All 24-hour daily block geometric average concentrations of sulfur dioxide emissions or average percent reductions of sulfur dioxide emissions.

(2) *[Intentionally left blank]*

(3) All 4-hour block or 24-hour daily block arithmetic average concentrations of carbon monoxide emissions.

(4) All 4-hour block arithmetic average load levels of your municipal waste combustion unit.

(5) All 4-hour block arithmetic average flue gas temperatures at the inlet of the particulate matter control device.

(c) *Records of exceedances.* Document three items:

(1) Calendar dates whenever any of the four pollutants or parameter levels recorded in paragraph (b) of this section or the opacity level recorded in paragraph (a)(1) of this section did not meet the emission limits or operating levels specified in 40 CFR part 62, subpart JJJ.

(2) Reasons you exceeded the applicable emission limits or operating levels.

(3) Corrective actions you took, or are taking, to meet the emission limits or operating levels.

(d) *Records of minimum data.* Document three items:

(1) Calendar dates for which you did not collect the minimum amount of data required under 40 CFR 62.15205 and 62.15280. Record these dates for four types of pollutants and parameters:

A. Stack S10: Processes I40 & I41 – Two Consumat dual chambered, stepped hearth, modular starved air municipal waste combustion units with energy recovery, combined combustion capacity of 100 tons per day to be increased to 150 tons per day under 20-BAP-152
Control Device C01 – Acid gas removal system consisting of a lime and powder activated carbon flue gas injection system to be upgraded to a circulating fluid bed scrubber and two cyclones under 20-BAP-152
Control Device C02 – Baghouse

7. Federal Plan Requirements for Small Municipal Waste Combustion Units Constructed on or Before August 30, 1999. [40 CFR Part 62, Subpart JJJ, as last amended 01/31/2003]

The permit condition numbers in this section of the permit are the associated provision numbers from the relevant standard as they appear in the above referenced Part and Subpart of Title 40 of the Code of Federal Regulations. References to provisions of 40 CFR contained within the permit conditions reference permit conditions with the same number as the referenced provision.

a. Requirements

(i) Sulfur dioxide emissions.

(ii) *[Intentionally left blank*

(iii) Carbon monoxide emissions.

(iv) Load levels of your municipal waste combustion unit.

(v) Temperatures of the flue gases at the inlet of the particulate matter control device.

(2) Reasons you did not collect the minimum data.

(3) Corrective actions you took or are taking to obtain the required amount of data.

(e) *Records of exclusions.* Document each time you have excluded data from your calculation of averages for any of the following four pollutants or parameters and the reasons the data were excluded:

(1) Sulfur dioxide emissions.

(2) *[Intentionally left blank]*

(3) Carbon monoxide emissions.

(4) Load levels of your municipal waste combustion unit.

(5) Temperatures of the flue gases at the inlet of the particulate matter control device.

(f) *Records of drift and accuracy.* Document the results of your daily drift tests and quarterly accuracy determinations according to Procedure 1 of appendix F of 40 CFR part 60. Keep these records for the sulfur dioxide and carbon monoxide continuous emissions monitoring systems.

(g) *[Intentionally left blank]*

(h) *Records of calendar dates.* Include the calendar date on each record.

[40 CFR 62.15305; s. 285.65(13), Wis. Stats.]

(62.15310) *Records for municipal waste combustion units that use activated carbon*
You must keep records of five items:

(a) *Records of average carbon feed rate.* Document five items:

(1) Average carbon feed rate (in kilograms or pounds per hour) during all stack tests for dioxins/furans and mercury emissions. Include supporting calculations in the records.

A. Stack S10: Processes I40 & I41 – Two Consumat dual chambered, stepped hearth, modular starved air municipal waste combustion units with energy recovery, combined combustion capacity of 100 tons per day to be increased to 150 tons per day under 20-BAP-152
Control Device C01 – Acid gas removal system consisting of a lime and powder activated carbon flue gas injection system to be upgraded to a circulating fluid bed scrubber and two cyclones under 20-BAP-152
Control Device C02 – Baghouse

7. Federal Plan Requirements for Small Municipal Waste Combustion Units Constructed on or Before August 30, 1999. [40 CFR Part 62, Subpart JJJ, as last amended 01/31/2003]

The permit condition numbers in this section of the permit are the associated provision numbers from the relevant standard as they appear in the above referenced Part and Subpart of Title 40 of the Code of Federal Regulations. References to provisions of 40 CFR contained within the permit conditions reference permit conditions with the same number as the referenced provision.

a. Requirements

(2) For the operating parameter chosen to monitor carbon feed rate, average operating level during all stack tests for dioxins/furans and mercury emissions. Include supporting data that document the relationship between the operating parameter and the carbon feed rate.

(3) All 8-hour block average carbon feed rates in kilograms (pounds) per hour calculated from the monitored operating parameter.

(4) Total carbon purchased and delivered to the municipal waste combustion plant for each calendar quarter. If you choose to evaluate total carbon purchased and delivered on a municipal waste combustion unit basis, record the total carbon purchased and delivered for each individual municipal waste combustion unit at your plant. Include supporting documentation.

(5) Required quarterly usage of carbon for the municipal waste combustion plant, calculated using the appropriate equation in 40 CFR 62.15390(f). If you choose to evaluate required quarterly usage for carbon on a municipal waste combustion unit basis, record the required quarterly usage for each municipal waste combustion unit at your plant. Include supporting calculations.

(b) *Records of low carbon feed rates.* Document three items:

(1) The calendar dates when the average carbon feed rate over an 8-hour block was less than the average carbon feed rates determined during the most recent stack test for dioxins/furans or mercury emissions (whichever has a higher feed rate).

(2) Reasons for the low carbon feed rates.

(3) Corrective actions you took or are taking to meet the 8-hour average carbon feed rate requirement.

(c) *Records of minimum carbon feed rate data.* Document three items:

(1) Calendar dates for which you did not collect the minimum amount of carbon feed rate data required under 40 CFR 62.15280.

(2) Reasons you did not collect the minimum data.

(3) Corrective actions you took or are taking to get the required amount of data.

(d) *Records of exclusions.* Document each time you have excluded data from your calculation of average carbon feed rates and the reasons the data were excluded.

(e) *Records of calendar dates.* Include the calendar date on each record.

[40 CFR 62.15310; s. 285.65(13), Wis. Stats.]

(62.15315) Report submittal

(a) Submit an initial report and annual reports, plus semiannual reports for any emission or parameter level that does not meet the limits specified in this subpart.

(b) Submit all reports on paper, postmarked on or before the submittal dates in 40 CFR 62.15325, 62.15335, and 62.15350. If the Administrator agrees, you may submit electronic reports.

A. Stack S10: Processes I40 & I41 – Two Consumat dual chambered, stepped hearth, modular starved air municipal waste combustion units with energy recovery, combined combustion capacity of 100 tons per day to be increased to 150 tons per day under 20-BAP-152
Control Device C01 – Acid gas removal system consisting of a lime and powder activated carbon flue gas injection system to be upgraded to a circulating fluid bed scrubber and two cyclones under 20-BAP-152
Control Device C02 – Baghouse

7. Federal Plan Requirements for Small Municipal Waste Combustion Units Constructed on or Before August 30, 1999. [40 CFR Part 62, Subpart JJJ, as last amended 01/31/2003]

The permit condition numbers in this section of the permit are the associated provision numbers from the relevant standard as they appear in the above referenced Part and Subpart of Title 40 of the Code of Federal Regulations. References to provisions of 40 CFR contained within the permit conditions reference permit conditions with the same number as the referenced provision.

a. Requirements

(c) Keep a copy of all reports required by 40 CFR 62.15330, 62.15340, and 62.15355 onsite for 5 years.

[40 CFR 62.15315; s. 285.65(13), Wis. Stats.]

(62.15320) Appropriate units of measurement for reporting data
See tables 4 and 5 of 40 CFR part 62, subpart JJJ, for appropriate units of measurement.

[40 CFR 62.15320; s. 285.65(13), Wis. Stats.]

(62.15325), (62.15330) *[Intentionally left blank]*

(62.15335) *Submittal of the annual report*
Submit the annual report no later than February 1 of each year that follows the calendar year in which you collected the data.

[40 CFR 62.15335; s. 285.65(13), Wis. Stats.]

(62.15340) *Content of the annual report*
Summarize data collected for all pollutants and parameters regulated under this subpart. Your summary must include 12 items:

(a) The results of the annual stack test, using appropriate units, for eight pollutants, as recorded under 40 CFR 62.15300(a):

(1) Dioxins/furans.
(2) Cadmium.
(3) Lead.
(4) Mercury.
(5) Opacity.
(6) Particulate matter.
(7) Hydrogen chloride.
(8) Fugitive ash.

(b) A list of the highest average emission levels recorded, in the appropriate units. List these values for four pollutants or parameters:

(1) Sulfur dioxide emissions.
(2) *[Intentionally left blank]*

A. Stack S10: Processes I40 & I41 – Two Consumat dual chambered, stepped hearth, modular starved air municipal waste combustion units with energy recovery, combined combustion capacity of 100 tons per day to be increased to 150 tons per day under 20-BAP-152
Control Device C01 – Acid gas removal system consisting of a lime and powder activated carbon flue gas injection system to be upgraded to a circulating fluid bed scrubber and two cyclones under 20-BAP-152
Control Device C02 – Baghouse

7. Federal Plan Requirements for Small Municipal Waste Combustion Units Constructed on or Before August 30, 1999. [40 CFR Part 62, Subpart JJJ, as last amended 01/31/2003]

The permit condition numbers in this section of the permit are the associated provision numbers from the relevant standard as they appear in the above referenced Part and Subpart of Title 40 of the Code of Federal Regulations. References to provisions of 40 CFR contained within the permit conditions reference permit conditions with the same number as the referenced provision.

a. Requirements

(3) Carbon monoxide emissions.

(4) Load level of the municipal waste combustion unit.

(5) Temperature of the flue gases at the inlet of the particulate matter air pollution control device (4-hour block average).

(c) The highest 6-minute opacity level measured. Base this value on all 6-minute average opacity levels recorded by your continuous opacity monitoring system (40 CFR 62.15305(a)(1)).

(d) For the use of activated carbon, include four records:

(1) The average carbon feed rates recorded during the most recent dioxins/furans and mercury stack tests.

(2) The lowest 8-hour block average carbon feed rate recorded during the year.

(3) The total carbon purchased and delivered to the municipal waste combustion plant for each calendar quarter. If you choose to evaluate total carbon purchased and delivered on a municipal waste combustion unit basis, record the total carbon purchased and delivered for each individual municipal waste combustion unit at your plant.

(4) The required quarterly carbon usage of your municipal waste combustion plant calculated using the appropriate equation in §62.15390(f). If you choose to evaluate required quarterly usage for carbon on a municipal waste combustion unit basis, record the required quarterly usage for each municipal waste combustion unit at your plant.

(e) The total number of days that you did not obtain the minimum number of hours of data for five pollutants or parameters. Include the reasons you did not obtain the data and corrective actions that you have taken to obtain the data in the future. Include data on:

(1) Sulfur dioxide emissions.

(2) *[Intentionally left blank]*

(3) Carbon monoxide emissions.

(4) Load level of the municipal waste combustion unit.

(5) Temperature of the flue gases at the inlet of the particulate matter air pollution control device.

(6) Carbon feed rate.

(f) The number of hours you have excluded data from the calculation of average levels (include the reasons for excluding it). Include data for five pollutants or parameters:

(1) Sulfur dioxide emissions.

(2) *[Intentionally left blank]*

A. Stack S10: Processes I40 & I41 – Two Consumat dual chambered, stepped hearth, modular starved air municipal waste combustion units with energy recovery, combined combustion capacity of 100 tons per day to be increased to 150 tons per day under 20-BAP-152
Control Device C01 – Acid gas removal system consisting of a lime and powder activated carbon flue gas injection system to be upgraded to a circulating fluid bed scrubber and two cyclones under 20-BAP-152
Control Device C02 – Baghouse

7. Federal Plan Requirements for Small Municipal Waste Combustion Units Constructed on or Before August 30, 1999. [40 CFR Part 62, Subpart JJJ, as last amended 01/31/2003]

The permit condition numbers in this section of the permit are the associated provision numbers from the relevant standard as they appear in the above referenced Part and Subpart of Title 40 of the Code of Federal Regulations. References to provisions of 40 CFR contained within the permit conditions reference permit conditions with the same number as the referenced provision.

a. Requirements

(3) Carbon monoxide emissions.

(4) Load level of the municipal waste combustion unit.

(5) Temperature of the flue gases at the inlet of the particulate matter air pollution control device.

(6) Carbon feed rate.

(g) A notice of your intent to begin a reduced stack testing schedule for dioxins/furans emissions during the following calendar year if you are eligible for alternative scheduling (40 CFR 62.15250(a) or (b)).

(h) A notice of your intent to begin a reduced stack testing schedule for other pollutants during the following calendar year if you are eligible for alternative scheduling (40 CFR 62.15250(a)).

(i) A summary of any emission or parameter level that did not meet the limits specified in this subpart.

(j) A summary of the data in paragraphs (a) through (d) of this section from the year preceding the reporting year. This summary gives the Administrator a summary of the performance of the municipal waste combustion unit over a 2-year period.

(k) *[Intentionally left blank]*

(l) Documentation of periods when all certified chief facility operators and certified shift supervisors are offsite for more than 12 hours.

[40 CFR 62.15340(a), (b)(1), (b)(3)-(5), (c)-(d), (e)(1), (e)(3)-(6), (f)(1), (f)(3)-(6), (g)-(j), (l); s. 285.65(13), Wis. Stats.]

(62.15345) *What to do if you are out of compliance with these standards*
You must submit a semiannual report on any recorded emission or parameter level that does not meet the requirements specified in this subpart.

[40 CFR 62.15345; s. 285.65(13), Wis. Stats.]

(62.15350) *Submittal requirements for semiannual out-of-compliance reports*

(a) For data collected during the first half of a calendar year, submit your semiannual report by August 1 of that year.

(b) For data you collected during the second half of the calendar year, submit your semiannual report by February 1 of the following year.

[40 CFR 62.15350; s. 285.65(13), Wis. Stats.]

(62.15355) *Content requirements for the semiannual out-of-compliance reports*
You must include three items in the semiannual report:

A. Stack S10: Processes I40 & I41 – Two Consumat dual chambered, stepped hearth, modular starved air municipal waste combustion units with energy recovery, combined combustion capacity of 100 tons per day to be increased to 150 tons per day under 20-BAP-152
Control Device C01 – Acid gas removal system consisting of a lime and powder activated carbon flue gas injection system to be upgraded to a circulating fluid bed scrubber and two cyclones under 20-BAP-152
Control Device C02 – Baghouse

7. Federal Plan Requirements for Small Municipal Waste Combustion Units Constructed on or Before August 30, 1999. [40 CFR Part 62, Subpart JJJ, as last amended 01/31/2003]

The permit condition numbers in this section of the permit are the associated provision numbers from the relevant standard as they appear in the above referenced Part and Subpart of Title 40 of the Code of Federal Regulations. References to provisions of 40 CFR contained within the permit conditions reference permit conditions with the same number as the referenced provision.

a. Requirements

(a) For any of the following five pollutants or parameters that exceeded the limits specified in this subpart, include the calendar date they exceeded the limits, the averaged and recorded data for that date, the reasons for exceeding the limits, and your corrective actions:

(1) Concentration or percent reduction of sulfur dioxide emissions.

(2) *[Intentionally left blank]*

(3) Concentration of carbon monoxide emissions.

(4) Load level of your municipal waste combustion unit.

(5) Temperature of the flue gases at the inlet of your particulate matter air pollution control device.

(6) Average 6-minute opacity level. The data obtained from your continuous opacity monitoring system are not used to determine compliance with the limit on opacity emissions.

(b) If the results of your annual stack tests (as recorded in 40 CFR 62.15300(a)) show emissions above the limits specified in table 4 of 40 CFR part 62, subpart JJJ, for dioxins/furans, cadmium, lead, mercury, particulate matter, opacity, hydrogen chloride, and fugitive ash, include a copy of the test report that documents the emission levels and your corrective actions.

(c) For the application of activated carbon to, include two items:

(1) Documentation of all dates when the 8-hour block average carbon feed rate (calculated from the carbon injection system operating parameter) is less than the highest carbon feed rate established during the most recent mercury and dioxins/furans stack test (as specified in 40 CFR 62.15310(a)(1)). Include four items:

(i) Eight-hour average carbon feed rate.

(ii) Reasons for these occurrences of low carbon feed rates.

(iii) The corrective actions you have taken to meet the carbon feed rate requirement.

(iv) The calendar date.

(2) Documentation of each quarter when total carbon purchased and delivered to the municipal waste combustion plant is less than the total required quarterly usage of carbon. If you choose to evaluate total carbon purchased and delivered on a municipal waste combustion unit basis, record the total carbon purchased and delivered for each individual municipal waste combustion unit at your plant. Include five items:

(i) Amount of carbon purchased and delivered to the plant.

(ii) Required quarterly usage of carbon.

(iii) Reasons for not meeting the required quarterly usage of carbon.

A. Stack S10: Processes I40 & I41 – Two Consumat dual chambered, stepped hearth, modular starved air municipal waste combustion units with energy recovery, combined combustion capacity of 100 tons per day to be increased to 150 tons per day under 20-BAP-152
Control Device C01 – Acid gas removal system consisting of a lime and powder activated carbon flue gas injection system to be upgraded to a circulating fluid bed scrubber and two cyclones under 20-BAP-152
Control Device C02 – Baghouse

7. Federal Plan Requirements for Small Municipal Waste Combustion Units Constructed on or Before August 30, 1999. [40 CFR Part 62, Subpart JJJ, as last amended 01/31/2003]

The permit condition numbers in this section of the permit are the associated provision numbers from the relevant standard as they appear in the above referenced Part and Subpart of Title 40 of the Code of Federal Regulations. References to provisions of 40 CFR contained within the permit conditions reference permit conditions with the same number as the referenced provision.

a. Requirements

(iv) The corrective actions you have taken to meet the required quarterly usage of carbon.

(v) The calendar date.

[40 CFR 62.15355(a)(1), (a)(3)-(6), (b)-(c); s. 285.65(13), Wis. Stats.]

(62.15360) *Changing reporting dates*

(a) If the Administrator agrees, you may change the semiannual or annual reporting dates.

(b) *See* s. 60.19(c) in subpart A of 40 CFR part 60 for procedures to seek approval to change your reporting date.

[40 CFR 62.15360; s. 285.65(13), Wis. Stats.]

(62.15365), (62.15370, (62.15375), (62.15380), (62.15385) *[Intentionally left blank]*

(62.15390) *Equations*

(a) *Concentration correction to 7 percent oxygen.* Correct any pollutant concentration to 7 percent oxygen using equation 1 of this section:

$$C_{7\%} = C_{unc} * (13.9) * \left(1/\left(20.9 - CO_2\right)\right) \quad \text{(Eq. 1)}$$

Where:
$C_{7\%}$ = concentration corrected to 7 percent oxygen.
C_{unc} = uncorrected pollutant concentration.
C_{O2} = concentration of oxygen (%).

(b) *Percent reduction in potential mercury emissions.* Calculate the percent reduction in potential mercury emissions ($\%P_{Hg}$) using equation 2 of this section:

$$\%P_{Hg} = \left(E_i - E_o\right) * \left(100/E_i\right) \quad \text{(Eq. 2)}$$

Where:
$\%P_{Hg}$ = percent reduction of potential mercury emissions
E_i = mercury emission concentration as measured at the air pollution control device inlet, corrected to 7 percent oxygen, dry basis
E_o = mercury emission concentration as measured at the air pollution control device outlet, corrected to 7 percent oxygen, dry basis

(c) *Percent reduction in potential hydrogen chloride emissions.* Calculate the percent reduction in potential hydrogen chloride emissions ($\%P_{HCl}$) using equation 3 of this section:

$$\%P_{HCl} = \left(E_i - E_o\right) * \left(100/E_i\right) \quad \text{(Eq. 3)}$$

Where:
$\%P_{HCl}$ = percent reduction of the potential hydrogen chloride emissions

A. Stack S10: Processes I40 & I41 – Two Consumat dual chambered, stepped hearth, modular starved air municipal waste combustion units with energy recovery, combined combustion capacity of 100 tons per day to be increased to 150 tons per day under 20-BAP-152
Control Device C01 – Acid gas removal system consisting of a lime and powder activated carbon flue gas injection system to be upgraded to a circulating fluid bed scrubber and two cyclones under 20-BAP-152
Control Device C02 – Baghouse

7. Federal Plan Requirements for Small Municipal Waste Combustion Units Constructed on or Before August 30, 1999. [40 CFR Part 62, Subpart JJJ, as last amended 01/31/2003]

The permit condition numbers in this section of the permit are the associated provision numbers from the relevant standard as they appear in the above referenced Part and Subpart of Title 40 of the Code of Federal Regulations. References to provisions of 40 CFR contained within the permit conditions reference permit conditions with the same number as the referenced provision.

a. Requirements

E_i = hydrogen chloride emission concentration as measured at the air pollution control device inlet, corrected to 7 percent oxygen, dry basis
E_o = hydrogen chloride emission concentration as measured at the air pollution control device outlet, corrected to 7 percent oxygen, dry basis

(d) *Capacity of a municipal waste combustion unit.* Calculate the capacity of the municipal waste combustion unit based on 24 hours of operation at the maximum charge rate. To determine the maximum charge rate:

(1) *[Intentionally left blank]*

(2) Use the maximum designed charging rate.

(e) *[Intentionally left blank]*

(f) *Quarterly carbon usage.* Calculate the required quarterly usage of carbon using equation 4 or 5 of this section for plant basis or unit basis:

(1) Plant basis.

$$C = \sum_{i=1}^{n} f_i * h_i \qquad \text{(Eq. 4)}$$

Where:
C = required quarterly carbon usage for the plant in kilograms (or pounds).
f_i = required carbon feed rate for the municipal waste combustion unit in kilograms (or pounds) per hour. This is the average carbon feed rate during the most recent mercury or dioxins/furans stack tests (whichever has a higher feed rate).
h_i = number of hours the municipal waste combustion unit was in operation during the calendar quarter (hours).
n = number of municipal waste combustion units, i, located at your plant.

(2) Unit basis.

$$C = f * h \qquad \text{(Eq. 5)}$$

Where:
C = required quarterly carbon usage for the unit in kilograms (or pounds).
f = required carbon feed rate for the municipal waste combustion unit in kilograms (or pounds) per hour. This is the average carbon feed rate during the most recent mercury or dioxins/furans stack tests (whichever has a higher feed rate).
h = number of hours the municipal waste combustion unit was in operation during the calendar quarter (hours).

[40 CFR 62.15390(a)-(c), (d)(1), (f); s. 285.65(13), Wis. Stats.]

(62.15395), (62.15400), (62.15405) *[Intentionally left blank]*

A. Stack S10: Processes I40 & I41 – Two Consumat dual chambered, stepped hearth, modular starved air municipal waste combustion units with energy recovery, combined combustion capacity of 100 tons per day to be increased to 150 tons per day under 20-BAP-152

Control Device C01 – Acid gas removal system consisting of a lime and powder activated carbon flue gas injection system to be upgraded to a circulating fluid bed scrubber and two cyclones under 20-BAP-152

Control Device C02 – Baghouse

7. Federal Plan Requirements for Small Municipal Waste Combustion Units Constructed on or Before August 30, 1999. [40 CFR Part 62, Subpart JJJ, as last amended 01/31/2003]

The permit condition numbers in this section of the permit are the associated provision numbers from the relevant standard as they appear in the above referenced Part and Subpart of Title 40 of the Code of Federal Regulations. References to provisions of 40 CFR contained within the permit conditions reference permit conditions with the same number as the referenced provision.

a. Requirements

(62.15410) *Definitions*

Terms used in 40 CFR part 62, subpart JJJ, and in section I.A.7. of this permit are defined in 40 CFR 62.15410. Terms used but not defined in 40 CFR 62.15410 are defined in the Clean Air Act and in subparts A and B of 40 CFR part 60.

[40 CFR 62.15410; s. 285.65(13), Wis. Stats.]

A. Stack S10: Processes I40 & I41 – Two Consumat dual chambered, stepped hearth, modular starved air municipal waste combustion units with energy recovery, combined combustion capacity of 100 tons per day to be increased to 150 tons per day under 20-BAP-152
Control Device C01 – Acid gas removal system consisting of a lime and powder activated carbon flue gas injection system to be upgraded to a circulating fluid bed scrubber and two cyclones under 20-BAP-152
Control Device C02 – Baghouse

8. New Source Performance Standards (NSPS) for Small Municipal Waste Combustion Units for Which Construction is Commenced After August 30, 1999 or for Which Modification or Reconstruction is Commenced After June 6, 2001. [40 CFR Part 60, Subpart AAAA, as last amended 12/06/2000]

The permit condition numbers in this section of the permit are the associated provision numbers from the relevant standard as they appear in the above referenced Part and Subpart of Title 40 of the Code of Federal Regulations. References to provisions of 40 CFR contained within the permit conditions reference permit conditions with the same number as the referenced provision.

a. Requirements

(60.1010) *Applicability*
The requirements of 40 CFR part 60, subpart AAAA, apply to I40 and I41 after the physical modification allowing for an increase in combustion capacity.

[40 CFR 60.1010; s. 285.65(13), Wis. Stats.]

(60.1015) *Definition of new municipal waste combustion unit*
Processes I40 and I41 are each a new municipal waste combustion unit because they are each a municipal waste combustion unit that commenced modification after June 6, 2001.

[40 CFR 60.1015(a)(2); s. 285.65(13), Wis. Stats.]

(60.1020) *[Intentionally left blank]*

(60.1025) *Applicability of 40 CFR part 60, subpart E, to municipal waste combustion units*
Because 40 CFR part 60, subpart AAAA, applies to your municipal waste combustion units, subpart E of 40 CFR part 60 does not apply to your municipal waste combustion units.

[40 CFR 60.1025; s. 285.65(13), Wis. Stats.]

(60.1030), (60.1035) *[Intentionally left blank]*

(60.1040) *Timing of applicability of different components of these new source performance standards*
After the municipal waste combustion units begin operation, you must meet all of the good combustion practices, emission limits, monitoring, stack testing, and most recordkeeping and reporting requirements.

[40 CFR 60.1040; s. 285.65(13), Wis. Stats.]

(60.1045) *Subcategories of small municipal waste combustion units within 40 CFR part 60, subpart AAAA*

(a) 40 CFR part 60, subpart AAAA, subcategorizes small municipal waste combustion units into two groups based on the aggregate capacity of the municipal waste combustion plant:

(1) *Class I Units. [Intentionally left blank]*

A. Stack S10: Processes I40 & I41 – Two Consumat dual chambered, stepped hearth, modular starved air municipal waste combustion units with energy recovery, combined combustion capacity of 100 tons per day to be increased to 150 tons per day under 20-BAP-152
Control Device C01 – Acid gas removal system consisting of a lime and powder activated carbon flue gas injection system to be upgraded to a circulating fluid bed scrubber and two cyclones under 20-BAP-152
Control Device C02 – Baghouse

8. New Source Performance Standards (NSPS) for Small Municipal Waste Combustion Units for Which Construction is Commenced After August 30, 1999 or for Which Modification or Reconstruction is Commenced After June 6, 2001. [40 CFR Part 60, Subpart AAAA, as last amended 12/06/2000]

The permit condition numbers in this section of the permit are the associated provision numbers from the relevant standard as they appear in the above referenced Part and Subpart of Title 40 of the Code of Federal Regulations. References to provisions of 40 CFR contained within the permit conditions reference permit conditions with the same number as the referenced provision.

a. Requirements

(2) *Class II Units.* Processes I40 and I41 are Class II units located at municipal waste combustion plants with an aggregate plant combustion capacity less than 250 tons per day of municipal solid waste.

(b) The requirements for Class I and Class II units are identical except for two items:

(1) Class I units have a nitrogen oxides emission limit. Class II units do not have a nitrogen oxides emission limit (see table 1 of 40 CFR part 60, subpart AAAA).

(2) Class II units are eligible for the reduced testing option provided in 40 CFR 60.1305.

[40 CFR 60.1045(a)(2) and (b); s. 285.65(13), Wis. Stats.]

(60.1050), (60.1055), (60.1060), (60.1065), (60.1070), (60.1075), (60.1080), (60.1085), (60.1090), (60.1095), (60.1100), (60.1105) *[Intentionally left blank]*

(60.1110), (60.1115), (60.1120), (60.1125), (60.1130), (60.1135), (60.1140), (60.1145), (60.1150) *[Intentionally left blank]*

(60.1155) *Types of operator training*
There are two types of required training:

(a) Training of operators of municipal waste combustion units using the U.S. Environmental Protection Agency (EPA) or a State-approved training course.

(b) Training of plant personnel using a plant-specific training course.

[40 CFR 60.1155; s. 285.65(13), Wis. Stats.]

(60.1160) *Completion of the operator training course*

(a) Three types of employees must complete the EPA or State-approved operator training course:

(1) Chief facility operators.

(2) Shift supervisors.

(3) Control room operators.

(b) Those employees must complete the operator training course by the later of three dates:

(1) Six months after your municipal waste combustion unit initial startup.

(2) December 6, 2001.

(3) The date before an employee assumes responsibilities that affect operation of the municipal waste combustion unit.

A. Stack S10: Processes I40 & I41 – Two Consumat dual chambered, stepped hearth, modular starved air municipal waste combustion units with energy recovery, combined combustion capacity of 100 tons per day to be increased to 150 tons per day under 20-BAP-152
Control Device C01 – Acid gas removal system consisting of a lime and powder activated carbon flue gas injection system to be upgraded to a circulating fluid bed scrubber and two cyclones under 20-BAP-152
Control Device C02 – Baghouse

8. New Source Performance Standards (NSPS) for Small Municipal Waste Combustion Units for Which Construction is Commenced After August 30, 1999 or for Which Modification or Reconstruction is Commenced After June 6, 2001. [40 CFR Part 60, Subpart AAAA, as last amended 12/06/2000]

The permit condition numbers in this section of the permit are the associated provision numbers from the relevant standard as they appear in the above referenced Part and Subpart of Title 40 of the Code of Federal Regulations. References to provisions of 40 CFR contained within the permit conditions reference permit conditions with the same number as the referenced provision.

a. Requirements

[40 CFR 60.1160; s. 285.65(13), Wis. Stats.]

(60.1165) *Completion of the plant-specific training course*

All employees with responsibilities that affect how a municipal waste combustion unit operates must complete the plant-specific training course. Include at least six types of employees:

(a) Chief facility operators.

(b) Shift supervisors.

(c) Control room operators.

(d) Ash handlers.

(e) Maintenance personnel.

(f) Crane or load handlers.

[40 CFR 60.1165; s. 285.65(13), Wis. Stats.]

(60.1170) *Requirements for plant-specific training*

For plant-specific training, you must do four things:

(a) For training at a particular plant, develop a specific operating manual for that plant by the later of two dates:

(1) Six months after your municipal waste combustion unit initial startup.

(2) December 6, 2001.

(b) Establish a program to review the plant-specific operating manual with people whose responsibilities affect the operation of your municipal waste combustion unit. Complete the initial review by the later of three dates:

(1) Six months after your municipal waste combustion unit initial startup.

(2) December 6, 2001.

(3) The date before an employee assumes responsibilities that affect operation of the municipal waste combustion unit.

(c) Update your manual annually.

(d) Review your manual with staff annually.

[40 CFR 60.1170; s. 285.65(13), Wis. Stats.]

A. Stack S10: Processes I40 & I41 – Two Consumat dual chambered, stepped hearth, modular starved air municipal waste combustion units with energy recovery, combined combustion capacity of 100 tons per day to be increased to 150 tons per day under 20-BAP-152
Control Device C01 – Acid gas removal system consisting of a lime and powder activated carbon flue gas injection system to be upgraded to a circulating fluid bed scrubber and two cyclones under 20-BAP-152
Control Device C02 – Baghouse

8. New Source Performance Standards (NSPS) for Small Municipal Waste Combustion Units for Which Construction is Commenced After August 30, 1999 or for Which Modification or Reconstruction is Commenced After June 6, 2001. [40 CFR Part 60, Subpart AAAA, as last amended 12/06/2000]

The permit condition numbers in this section of the permit are the associated provision numbers from the relevant standard as they appear in the above referenced Part and Subpart of Title 40 of the Code of Federal Regulations. References to provisions of 40 CFR contained within the permit conditions reference permit conditions with the same number as the referenced provision.

a. Requirements

(60.1175) *Information to be included in the plant-specific operating manual*
You must include 11 items in the operating manual for your plant:

(a) A summary of all applicable requirements in this subpart.

(b) A description of the basic combustion principles that apply to municipal waste combustion units.

(c) Procedures for receiving, handling, and feeding municipal solid waste.

(d) Procedures to be followed during periods of startup, shutdown, and malfunction of the municipal waste combustion unit.

(e) Procedures for maintaining a proper level of combustion air supply.

(f) Procedures for operating the municipal waste combustion unit in compliance with the requirements contained in this subpart.

(g) Procedures for responding to periodic upset or off-specification conditions.

(h) Procedures for minimizing carryover of particulate matter.

(i) Procedures for handling ash.

(j) Procedures for monitoring emissions from the municipal waste combustion unit.

(k) Procedures for recordkeeping and reporting.

[40 CFR 60.1175; s. 285.65(13), Wis. Stats.]

(60.1180) *Location of the plant-specific operating manual*
You must keep your operating manual in an easily accessible location at your plant. It must be available for review or inspection by all employees who must review it and by the Administrator.

[40 CFR 60.1180; s. 285.65(13), Wis. Stats.]

(60.1185) *Requirements for operator certification for the chief facility operator and shift supervisor*

(a) Each chief facility operator and shift supervisor must obtain and keep a current provisional operator certification from the American Society of Mechanical Engineers (QRO-1-1994) (incorporated by reference in 40 CFR 60.17(h)(1)) or a current provisional operator certification from your State certification program.

(b) Each chief facility operator and shift supervisor must obtain a provisional certification by the later of three dates:

(1) Six months after the municipal waste combustion unit initial startup.

A. Stack S10: Processes I40 & I41 – Two Consumat dual chambered, stepped hearth, modular starved air municipal waste combustion units with energy recovery, combined combustion capacity of 100 tons per day to be increased to 150 tons per day under 20-BAP-152
Control Device C01 – Acid gas removal system consisting of a lime and powder activated carbon flue gas injection system to be upgraded to a circulating fluid bed scrubber and two cyclones under 20-BAP-152
Control Device C02 – Baghouse

8. New Source Performance Standards (NSPS) for Small Municipal Waste Combustion Units for Which Construction is Commenced After August 30, 1999 or for Which Modification or Reconstruction is Commenced After June 6, 2001. [40 CFR Part 60, Subpart AAAA, as last amended 12/06/2000]

The permit condition numbers in this section of the permit are the associated provision numbers from the relevant standard as they appear in the above referenced Part and Subpart of Title 40 of the Code of Federal Regulations. References to provisions of 40 CFR contained within the permit conditions reference permit conditions with the same number as the referenced provision.

a. Requirements

(2) December 6, 2001.

(3) Six months after they transfer to the municipal waste combustion unit or 6 months after they are hired to work at the municipal waste combustion unit.

(c) Each chief facility operator and shift supervisor must take one of three actions:

(1) Obtain a full certification from the American Society of Mechanical Engineers or a State certification program in your State.

(2) Schedule a full certification exam with the American Society of Mechanical Engineers (QRO-1-1994) (incorporated by reference in 40 CFR 60.17(h)(1)).

(3) Schedule a full certification exam with your State certification program.

(d) The chief facility operator and shift supervisor must obtain the full certification or be scheduled to take the certification exam by the later of three dates:

(1) Six months after the municipal waste combustion unit initial startup.

(2) December 6, 2001.

(3) Six months after they transfer to the municipal waste combustion unit or 6 months after they are hired to work at the municipal waste combustion unit.

[40 CFR 60.1185; s. 295.65(13), Wis. Stats.]

(60.1190) *Requirements for who may operate the municipal waste combustion unit after the required date for operator certification*
After the required date for full or provisional certifications, you must not operate your municipal waste combustion unit unless one of four employees is on duty:

(a) A fully certified chief facility operator.

(b) A provisionally certified chief facility operator who is scheduled to take the full certification exam.

(c) A fully certified shift supervisor.

(d) A provisionally certified shift supervisor who is scheduled to take the full certification exam.

[40 CFR 60.1190; s. 285.65(13), Wis. Stats.]

(60.1195) *Requirements for when all the certified operators must be temporarily offsite*
If the certified chief facility operator and certified shift supervisor both are unavailable, a provisionally certified control room operator at the municipal waste combustion unit may fulfill the certified operator requirement. Depending on the length of time that a certified chief facility operator and certified shift supervisor are away, you must meet one of three criteria:

(a) When the certified chief facility operator and certified shift supervisor are both offsite for 12 hours or less, and no other certified operator is onsite, the provisionally certified control room operator may perform those duties without notice to, or approval by, the Administrator.

A. Stack S10: Processes I40 & I41 – Two Consumat dual chambered, stepped hearth, modular starved air municipal waste combustion units with energy recovery, combined combustion capacity of 100 tons per day to be increased to 150 tons per day under 20-BAP-152
Control Device C01 – Acid gas removal system consisting of a lime and powder activated carbon flue gas injection system to be upgraded to a circulating fluid bed scrubber and two cyclones under 20-BAP-152
Control Device C02 – Baghouse

8. New Source Performance Standards (NSPS) for Small Municipal Waste Combustion Units for Which Construction is Commenced After August 30, 1999 or for Which Modification or Reconstruction is Commenced After June 6, 2001. [40 CFR Part 60, Subpart AAAA, as last amended 12/06/2000]

The permit condition numbers in this section of the permit are the associated provision numbers from the relevant standard as they appear in the above referenced Part and Subpart of Title 40 of the Code of Federal Regulations. References to provisions of 40 CFR contained within the permit conditions reference permit conditions with the same number as the referenced provision.

a. Requirements

(b) When the certified chief facility operator and certified shift supervisor are offsite for more than 12 hours, but for 2 weeks or less, and no other certified operator is onsite, the provisionally certified control room operator may perform those duties without notice to, or approval by, the Administrator. However, you must record the period when the certified chief facility operator and certified shift supervisor are offsite and include that information in the annual report as specified under 40 CFR 60.1410(l).

(c) When the certified chief facility operator and certified shift supervisor are offsite for more than 2 weeks, and no other certified operator is onsite, the provisionally certified control room operator may perform those duties without notice to, or approval by, the Administrator. However, you must take two actions:

(1) Notify the Administrator in writing. In the notice, state what caused the absence and what you are doing to ensure that a certified chief facility operator or certified shift supervisor is onsite.

(2) Submit a status report and corrective action summary to the Administrator every 4 weeks following the initial notification. If the Administrator notifies you that your status report or corrective action summary is disapproved, the municipal waste combustion unit may continue operation for 90 days, but then must cease operation. If corrective actions are taken in the 90-day period such that the Administrator withdraws the disapproval, municipal waste combustion unit operation may continue.

[40 CFR 60.1195; s. 285.65(13), Wis. Stats.]

(60.1200) *Operating practice requirements for municipal waste combustion units*

(a) You must not operate your municipal waste combustion unit at loads greater than 110 percent of the maximum demonstrated load of the municipal waste combustion unit (4-hour block average), as specified under "Definitions" (§60.1465).

(b) You must not operate your municipal waste combustion unit so that the temperature at the inlet of the particulate matter control device exceeds 17 °C above the maximum demonstrated temperature of the particulate matter control device (4-hour block average), as specified under "Definitions" (§60.1465).

(c) If your municipal waste combustion unit uses activated carbon to control dioxins/furans or mercury emissions, you must maintain an 8-hour block average carbon feed rate at or above the highest average level established during the most recent dioxins/furans or mercury test.

(d) If your municipal waste combustion unit uses activated carbon to control dioxins/furans or mercury emissions, you must evaluate total carbon usage for each calendar quarter. The total amount of carbon purchased and delivered to your municipal waste combustion plant must be at or above the required quarterly usage of carbon. At your option, you may choose to evaluate required quarterly carbon usage on a municipal waste combustion unit basis for each individual municipal waste combustion unit at your plant. Calculate the required quarterly usage of carbon using equation 4 or 5 in §60.1460(f).

(e) Your municipal waste combustion unit is exempt from limits on load level, temperature at the inlet of the particulate matter control device, and carbon feed rate during any of five situations:

A. Stack S10: Processes I40 & I41 – Two Consumat dual chambered, stepped hearth, modular starved air municipal waste combustion units with energy recovery, combined combustion capacity of 100 tons per day to be increased to 150 tons per day under 20-BAP-152
Control Device C01 – Acid gas removal system consisting of a lime and powder activated carbon flue gas injection system to be upgraded to a circulating fluid bed scrubber and two cyclones under 20-BAP-152
Control Device C02 – Baghouse

8. New Source Performance Standards (NSPS) for Small Municipal Waste Combustion Units for Which Construction is Commenced After August 30, 1999 or for Which Modification or Reconstruction is Commenced After June 6, 2001. [40 CFR Part 60, Subpart AAAA, as last amended 12/06/2000]

The permit condition numbers in this section of the permit are the associated provision numbers from the relevant standard as they appear in the above referenced Part and Subpart of Title 40 of the Code of Federal Regulations. References to provisions of 40 CFR contained within the permit conditions reference permit conditions with the same number as the referenced provision.

a. Requirements

(1) During your annual tests for dioxins/furans.

(2) During your annual mercury tests (for carbon feed rate requirements only).

(3) During the 2 weeks preceding your annual tests for dioxins/furans.

(4) During the 2 weeks preceding your annual mercury tests (for carbon feed rate requirements only).

(5) Whenever the Administrator or delegated State authority permits you to do any of five activities:

(i) Evaluate system performance.

(ii) Test new technology or control technologies.

(iii) Perform diagnostic testing.

(iv) Perform other activities to improve the performance of your municipal waste combustion unit.

(v) Perform other activities to advance the state of the art for emission controls for your municipal waste combustion unit.

[40 CFR 60.1200; s. 285.65(13), Wis. Stats.]

(60.1205) *Operating requirements during periods of startup, shutdown, and malfunction*

(a) The operating requirements of this subpart apply at all times except during periods of municipal waste combustion unit startup, shutdown, or malfunction.

(b) Each startup, shutdown, or malfunction must not last for longer than 3 hours.

[40 CFR 60.1205; s. 285.65(13), Wis. Stats.]

(60.1210) *Pollutants regulated by 40 CFR part 60, subpart AAAA*

Eleven pollutants, in four groupings, are regulated:

(a) *Organics.* Dioxins/furans.

(b) *Metals.*

(1) Cadmium.

(2) Lead.

(3) Mercury.

(4) Opacity.

(5) Particulate matter.

A. Stack S10: Processes I40 & I41 – Two Consumat dual chambered, stepped hearth, modular starved air municipal waste combustion units with energy recovery, combined combustion capacity of 100 tons per day to be increased to 150 tons per day under 20-BAP-152
Control Device C01 – Acid gas removal system consisting of a lime and powder activated carbon flue gas injection system to be upgraded to a circulating fluid bed scrubber and two cyclones under 20-BAP-152
Control Device C02 – Baghouse

8. New Source Performance Standards (NSPS) for Small Municipal Waste Combustion Units for Which Construction is Commenced After August 30, 1999 or for Which Modification or Reconstruction is Commenced After June 6, 2001. [40 CFR Part 60, Subpart AAAA, as last amended 12/06/2000]

The permit condition numbers in this section of the permit are the associated provision numbers from the relevant standard as they appear in the above referenced Part and Subpart of Title 40 of the Code of Federal Regulations. References to provisions of 40 CFR contained within the permit conditions reference permit conditions with the same number as the referenced provision.

a. Requirements

(c) *Acid gases.*

(1) Hydrogen chloride.

(2) Nitrogen oxides.

(3) Sulfur dioxide.

(d) *Other.*

(1) Carbon monoxide.

(2) Fugitive ash.

[40 CFR 60.1210; s. 285.65(13), Wis. Stats.]

(60.1215) *Emission limits*

You must meet the emission limits specified in tables 1 and 2 of 40 CFR part 60, subpart AAAA. You must meet the limits 60 days after your municipal waste combustion unit reaches the maximum load level but no later than 180 days after its initial startup.

Table 1 to Subpart AAAA of Part 60 – Emission Limits for New Small Municipal Waste Combustion Units

For the following pollutants	You must meet the following emission limits [a]	Using the following averaging times	And determine compliance by the following methods
1. Organics			
Dioxins/Furans (total mass basis)	13 nanograms per dry standard cubic meter	3-run average (minimum run duration is 4 hours)	Stack test.
2. Metals:			
Cadmium	0.020 milligrams per dry standard cubic meter	3-run average (run duration specified in test method)	Stack test.
Lead	0.20 milligrams per dry standard cubic meter	3-run average (run duration specified in test method)	Stack test.

A. Stack S10: Processes I40 & I41 – Two Consumat dual chambered, stepped hearth, modular starved air municipal waste combustion units with energy recovery, combined combustion capacity of 100 tons per day to be increased to 150 tons per day under 20-BAP-152
Control Device C01 – Acid gas removal system consisting of a lime and powder activated carbon flue gas injection system to be upgraded to a circulating fluid bed scrubber and two cyclones under 20-BAP-152
Control Device C02 – Baghouse

8. New Source Performance Standards (NSPS) for Small Municipal Waste Combustion Units for Which Construction is Commenced After August 30, 1999 or for Which Modification or Reconstruction is Commenced After June 6, 2001. [40 CFR Part 60, Subpart AAAA, as last amended 12/06/2000]

The permit condition numbers in this section of the permit are the associated provision numbers from the relevant standard as they appear in the above referenced Part and Subpart of Title 40 of the Code of Federal Regulations. References to provisions of 40 CFR contained within the permit conditions reference permit conditions with the same number as the referenced provision.

a. Requirements

Mercury	0.080 milligrams per dry standard cubic meter or 85 percent reduction of potential mercury emissions	3-run average (run duration specified in test method)	Stack test.
Opacity	10 percent	Thirty 6-minute averages	Stack test.
Particulate Matter	24 milligrams per dry standard cubic meter	3-run average (run duration specified in test method)	Stack test.
3. Acid Gases:			
Hydrogen Chloride	25 parts per million by dry volume or 95 percent reduction of potential hydrogen chloride emissions	3-run average (minimum run duration is 1 hour)	Stack test
Nitrogen Oxides (Class II units)[c]	500 parts per million by dry volume	See footnote[d]	See footnote[d]
Sulfur Dioxide	30 parts per million by dry volume or 80 percent reduction of potential sulfur dioxide emissions	24-hour daily block geometric average concentration or percent reduction	Continuous monitoring emission system.
4. Other:			
Fugitive Ash	Visible emissions for no more than 5 percent of hourly observation period	Three 1-hour observation periods	Visible emission test.

[a] All emission limits (except for opacity) are measured at 7 percent oxygen.

A. Stack S10: Processes I40 & I41 – Two Consumat dual chambered, stepped hearth, modular starved air municipal waste combustion units with energy recovery, combined combustion capacity of 100 tons per day to be increased to 150 tons per day under 20-BAP-152
Control Device C01 – Acid gas removal system consisting of a lime and powder activated carbon flue gas injection system to be upgraded to a circulating fluid bed scrubber and two cyclones under 20-BAP-152
Control Device C02 – Baghouse

8. New Source Performance Standards (NSPS) for Small Municipal Waste Combustion Units for Which Construction is Commenced After August 30, 1999 or for Which Modification or Reconstruction is Commenced After June 6, 2001. [40 CFR Part 60, Subpart AAAA, as last amended 12/06/2000]

The permit condition numbers in this section of the permit are the associated provision numbers from the relevant standard as they appear in the above referenced Part and Subpart of Title 40 of the Code of Federal Regulations. References to provisions of 40 CFR contained within the permit conditions reference permit conditions with the same number as the referenced provision.

a. Requirements

[b] Class I units mean small municipal waste combustion units subject to this subpart that are located at municipal waste combustion plants with an aggregate plant combustion capacity more than 250 tons per day of municipal solid waste. See 40 CFR 60.1465 for definitions.

[c] Class II units mean small municipal waste combustion units subject to this subpart that are located at municipal waste combustion plants with an aggregate plant combustion capacity no more than 250 tons per day of municipal solid waste. See 40 CFR 60.1465 for definitions.

[d] No monitoring, testing, recordkeeping, or reporting is required to demonstrate compliance with the nitrogen oxides limit for Class II units.

Table 2 to Subpart AAAA of Part 60 – Carbon Monoxide Emission Limits for New Small Municipal Waste Combustion Units

For the following municipal waste combustion units	You must meet the following carbon monoxide limits [a]	Using the following averaging times [b]
7. Modular starved-air and excess air	50 parts per million by dry volume	4-hour.

[a] All limits (except for opacity) are measured at 7 percent oxygen. Compliance is determined by continuous emission monitoring systems.

[b] Block averages, arithmetic mean. See 40 CFR 60.1465 for definitions.

[40 CFR 60.1215, Table 1 and item 7 from Table 2 to 40 CFR part 60, subpart AAAA; s. 285.65(13), Wis. Stats.]

(60.1220) *Emission limits during periods of startup, shutdown, and malfunction*

(a) The emission limits of this subpart apply at all times except during periods of municipal waste combustion unit startup, shutdown, or malfunction.

(b) Each startup, shutdown, or malfunction must not last for longer than 3 hours.

(c) A maximum of 3 hours of test data can be dismissed from compliance calculations during periods of startup, shutdown, or malfunction.

(d) During startup, shutdown, or malfunction periods longer than 3 hours, emissions data cannot be discarded from compliance calculations and all provisions under 40 CFR 60.11(d) apply.

[40 CFR 60.1220; s. 285.65(13), Wis. Stats.]

(60.1225) *Types of continuous emission monitoring that must be performed*

To continuously monitor emissions, you must perform four tasks:

A. Stack S10: Processes I40 & I41 – Two Consumat dual chambered, stepped hearth, modular starved air municipal waste combustion units with energy recovery, combined combustion capacity of 100 tons per day to be increased to 150 tons per day under 20-BAP-152
Control Device C01 – Acid gas removal system consisting of a lime and powder activated carbon flue gas injection system to be upgraded to a circulating fluid bed scrubber and two cyclones under 20-BAP-152
Control Device C02 – Baghouse

8. New Source Performance Standards (NSPS) for Small Municipal Waste Combustion Units for Which Construction is Commenced After August 30, 1999 or for Which Modification or Reconstruction is Commenced After June 6, 2001. [40 CFR Part 60, Subpart AAAA, as last amended 12/06/2000]

The permit condition numbers in this section of the permit are the associated provision numbers from the relevant standard as they appear in the above referenced Part and Subpart of Title 40 of the Code of Federal Regulations. References to provisions of 40 CFR contained within the permit conditions reference permit conditions with the same number as the referenced provision.

a. Requirements

(a) Install continuous emission monitoring systems for certain gaseous pollutants.

(b) Make sure your continuous emission monitoring systems are operating correctly.

(c) Make sure you obtain the minimum amount of monitoring data.

(d) Install a continuous opacity monitoring system.

[40 CFR 60.1225; s. 285.65(13), Wis. Stats.]

(60.1230) *Continuous emission monitoring systems for gaseous pollutants*

(a) You must install, calibrate, maintain, and operate continuous emission monitoring systems for oxygen (or carbon dioxide), sulfur dioxide, and carbon monoxide. Install the continuous emission monitoring systems for sulfur dioxide, nitrogen oxides, and oxygen (or carbon dioxide) at the outlet of the air pollution control device.

(b) You must install, evaluate, and operate each continuous emission monitoring system according to the "Monitoring Requirements" in 40 CFR 60.13.

(c) You must monitor the oxygen (or carbon dioxide) concentration at each location where you monitor sulfur dioxide and carbon monoxide.

(d)-(e) *[Intentionally left blank]*

(f) If you prefer to use an alternative sulfur dioxide monitoring method, such as parametric monitoring, or cannot monitor emissions at the inlet of the air pollution control device to determine percent reduction, you can apply to the Administrator for approval to use an alternative monitoring method under 40 CFR 60.13(i).

[40 CFR 60.1230(a)-(c), (f); s. 285.65(13), Wis. Stats.]

(60.1235) *Use of the data from the continuous emission monitoring systems*

You must use data from the continuous emission monitoring systems for sulfur dioxide and carbon monoxide to demonstrate continuous compliance with the emission limits specified in tables 1 and 2 of 40 CFR part 60, subpart AAAA. To demonstrate compliance for dioxins/furans, cadmium, lead, mercury, particulate matter, opacity, hydrogen chloride, and fugitive ash, see 40 CFR 60.1290.

[40 CFR 60.1235; s. 285.65(13), Wis. Stats.]

(60.1240) *Requirements to ensure continuous emission monitoring systems are operating correctly*

(a) Conduct initial, daily, quarterly, and annual evaluations of your continuous emission monitoring systems that measure oxygen (or carbon dioxide), sulfur dioxide, and carbon monoxide.

A. Stack S10: Processes I40 & I41 – Two Consumat dual chambered, stepped hearth, modular starved air municipal waste combustion units with energy recovery, combined combustion capacity of 100 tons per day to be increased to 150 tons per day under 20-BAP-152
Control Device C01 – Acid gas removal system consisting of a lime and powder activated carbon flue gas injection system to be upgraded to a circulating fluid bed scrubber and two cyclones under 20-BAP-152
Control Device C02 – Baghouse

8. New Source Performance Standards (NSPS) for Small Municipal Waste Combustion Units for Which Construction is Commenced After August 30, 1999 or for Which Modification or Reconstruction is Commenced After June 6, 2001. [40 CFR Part 60, Subpart AAAA, as last amended 12/06/2000]

The permit condition numbers in this section of the permit are the associated provision numbers from the relevant standard as they appear in the above referenced Part and Subpart of Title 40 of the Code of Federal Regulations. References to provisions of 40 CFR contained within the permit conditions reference permit conditions with the same number as the referenced provision.

a. Requirements

(b) Complete your initial evaluation of the continuous emission monitoring systems within 60 days after your municipal waste combustion unit reaches the maximum load level at which it will operate, but no later than 180 days after its initial startup.

(c) For initial and annual evaluations, collect data concurrently (or within 30 to 60 minutes) using your oxygen (or carbon dioxide) continuous emission monitoring system, your sulfur dioxide, or carbon monoxide continuous emission monitoring systems, as appropriate, and the appropriate test methods specified in table 3 of 40 CFR part 60, subpart AAAA. Collect the data during each initial and annual evaluation of your continuous emission monitoring systems following the applicable performance specifications in appendix B of 40 CFR part 60. Table 4 of 40 CFR part 60, subpart AAAA, shows the performance specifications that apply to each continuous emission monitoring system.

Table 3 to Subpart AAAA of Part 60 – Requirements for Validating Continuous Emission Monitoring Systems (CEMS)

For the following continuous emission monitoring systems	Use the following methods in appendix A of this part to validate pollutant concentration levels	Use the following methods in appendix A of this part to measure oxygen (or carbon dioxide)
2. Sulfur Dioxide	Method 6 or 6C	Method 3 or 3A.
3. Carbon Monoxide	Method 10, 10A, or 10B	Method 3 or 3A.

[a] Class I units mean small municipal waste combustion units subject to this subpart that are located at municipal waste combustion plants with an aggregate plant combustion capacity more than 250 tons per day of municipal solid waste. See §60.1465 for definitions.

Table 4 to Subpart AAAA of Part 60 – Requirements for Continuous Emission Monitoring Systems (CEMS)

For the following pollutants	Use the following span values for your CEMS	Use the following performance specifications in appendix B of 40 CFR part 60 for your CEMS	If needed to meet minimum data requirements, use the following alternate methods in appendix A of 40 CFR part 60 to collect data
1. Opacity	100 percent opacity	P.S. 1	Method 9.
3. Sulfur Dioxide	Inlet to control device: 125 percent of the maximum expected sulfur dioxide emissions of the municipal waste combustion unit. Control device outlet: 50 percent of the	P.S. 2	Method 6C.

A. Stack S10: Processes I40 & I41 – Two Consumat dual chambered, stepped hearth, modular starved air municipal waste combustion units with energy recovery, combined combustion capacity of 100 tons per day to be increased to 150 tons per day under 20-BAP-152
Control Device C01 – Acid gas removal system consisting of a lime and powder activated carbon flue gas injection system to be upgraded to a circulating fluid bed scrubber and two cyclones under 20-BAP-152
Control Device C02 – Baghouse

8. New Source Performance Standards (NSPS) for Small Municipal Waste Combustion Units for Which Construction is Commenced After August 30, 1999 or for Which Modification or Reconstruction is Commenced After June 6, 2001. [40 CFR Part 60, Subpart AAAA, as last amended 12/06/2000]

The permit condition numbers in this section of the permit are the associated provision numbers from the relevant standard as they appear in the above referenced Part and Subpart of Title 40 of the Code of Federal Regulations. References to provisions of 40 CFR contained within the permit conditions reference permit conditions with the same number as the referenced provision.

a. Requirements

	maximum expected hourly potential sulfur dioxide emissions of the municipal waste combustion unit		
4. Carbon Monoxide	125 percent of the maximum expected hourly potential carbon with monoxide emissions of the municipal waste combustion unit	P.S. 4A	Method 10 alternative interference trap.
5. Oxygen or Carbon Dioxide	25 percent oxygen or 25 percent carbon dioxide	P.S. 3	Method 3A or 3B.

[a] Class I units mean small municipal waste combustion units subject to this subpart that are located at municipal waste combustion plants with an aggregate plant combustion capacity more than 250 tons per day of municipal solid waste. See 40 CFR 60.1465 for definitions.

(d) Follow the quality assurance procedures in Procedure 1 of appendix F of 40 CFR part 60 for each continuous emission monitoring system. The procedures include daily calibration drift and quarterly accuracy determinations.

[40 CFR 60.1240, Tables 3 and 4 of 40 CFR part 60, subpart AAAA; s. 285.65(13), Wis. Stats.]

(60.1245) *Exemptions from appendix B or appendix F requirements to evaluate continuous emission monitoring systems*
The accuracy tests for your sulfur dioxide continuous emission monitoring system require you to also evaluate your oxygen (or carbon dioxide) continuous emission monitoring system. Therefore, your oxygen (or carbon dioxide) continuous emission monitoring system is exempt from two requirements:

(a) Section 2.3 of Performance Specification 3 in appendix B of this part (relative accuracy requirement).

(b) Section 5.1.1 of appendix F of this part (relative accuracy test audit).

[40 CFR 60.1245; s. 285.65(13), Wis. Stats.]

(60.1250) *Schedule for evaluating continuous emission monitoring systems*

(a) Conduct annual evaluations of your continuous emission monitoring systems no more than 13 months after the previous evaluation was conducted.

(b) Evaluate your continuous emission monitoring systems daily and quarterly as specified in appendix F of 40 CFR part 60.

[40 CFR 60.1250; s. 285.65(13), Wis. Stats.]

A. Stack S10: Processes I40 & I41 – Two Consumat dual chambered, stepped hearth, modular starved air municipal waste combustion units with energy recovery, combined combustion capacity of 100 tons per day to be increased to 150 tons per day under 20-BAP-152
Control Device C01 – Acid gas removal system consisting of a lime and powder activated carbon flue gas injection system to be upgraded to a circulating fluid bed scrubber and two cyclones under 20-BAP-152
Control Device C02 – Baghouse

8. New Source Performance Standards (NSPS) for Small Municipal Waste Combustion Units for Which Construction is Commenced After August 30, 1999 or for Which Modification or Reconstruction is Commenced After June 6, 2001. [40 CFR Part 60, Subpart AAAA, as last amended 12/06/2000]

The permit condition numbers in this section of the permit are the associated provision numbers from the relevant standard as they appear in the above referenced Part and Subpart of Title 40 of the Code of Federal Regulations. References to provisions of 40 CFR contained within the permit conditions reference permit conditions with the same number as the referenced provision.

a. Requirements

(60.1255) *[Intentionally left blank]*

(60.1260) *Minimum amount of monitoring data that must be collected with continuous emission monitoring systems*

(a) Where continuous emission monitoring systems are required, obtain 1-hour arithmetic averages. Make sure the averages for sulfur dioxide, nitrogen oxides, and carbon monoxide are in parts per million by dry volume at 7 percent oxygen (or the equivalent carbon dioxide level). Use the 1-hour averages of oxygen (or carbon dioxide) data from your continuous emission monitoring system to determine the actual oxygen (or carbon dioxide) level and to calculate emissions at 7 percent oxygen (or the equivalent carbon dioxide level).

(b) Obtain at least two data points per hour in order to calculate a valid 1-hour arithmetic average. Section 60.13(e)(2) requires your continuous emission monitoring systems to complete at least one cycle of operation (sampling, analyzing, and data recording) for each 15-minute period.

(c) Obtain valid 1-hour averages for 75 percent of the operating hours per day for 90 percent of the operating days per calendar quarter. An operating day is any day the unit combusts any municipal solid waste or refuse-derived fuel.

(d) If you do not obtain the minimum data required in paragraphs (a) through (c) of this section, you are in violation of the data collection requirement regardless of the emission level monitored, and you must notify the Administrator according to 40 CFR 60.1410(e).

(e) If you do not obtain the minimum data required in paragraphs (a) through (c) of this section, you must still use all valid data from the continuous emission monitoring systems in calculating emission concentrations and percent reductions in accordance with 40 CFR 60.1265.

[40 CFR 60.1260; s. 285.65(13), Wis. Stats.]

(60.1265) *Converting 1-hour arithmetic averages into the appropriate averaging times and units*

(a) Use the equation in 40 CFR 60.1460(a) to calculate emissions at 7 percent oxygen.

(b) Use EPA Reference Method 19 in appendix A of 40 CFR part 60, section 4.3, to calculate the daily geometric average concentrations of sulfur dioxide emissions. If you are monitoring the percent reduction of sulfur dioxide, use EPA Reference Method 19 in appendix A of 40 CFR part 60, section 5.4, to determine the daily geometric average percent reduction of potential sulfur dioxide emissions.

(c) *[Intentionally left blank]*

(d) Use EPA Reference Method 19 in appendix A of this part, section 4.1, to calculate the 4-hour or 24-hour daily block averages (as applicable) for concentrations of carbon monoxide.

[40 CFR 60.1265(a), (b), and (d); s. 285.65(13), Wis. Stats.]

A. Stack S10: Processes I40 & I41 – Two Consumat dual chambered, stepped hearth, modular starved air municipal waste combustion units with energy recovery, combined combustion capacity of 100 tons per day to be increased to 150 tons per day under 20-BAP-152
Control Device C01 – Acid gas removal system consisting of a lime and powder activated carbon flue gas injection system to be upgraded to a circulating fluid bed scrubber and two cyclones under 20-BAP-152
Control Device C02 – Baghouse

8. New Source Performance Standards (NSPS) for Small Municipal Waste Combustion Units for Which Construction is Commenced After August 30, 1999 or for Which Modification or Reconstruction is Commenced After June 6, 2001. [40 CFR Part 60, Subpart AAAA, as last amended 12/06/2000]

The permit condition numbers in this section of the permit are the associated provision numbers from the relevant standard as they appear in the above referenced Part and Subpart of Title 40 of the Code of Federal Regulations. References to provisions of 40 CFR contained within the permit conditions reference permit conditions with the same number as the referenced provision.

a. Requirements

(60.1270) *Requirements for continuous opacity monitoring systems and data use*

(a) Install, calibrate, maintain, and operate a continuous opacity monitoring system.

(b) Install, evaluate, and operate each continuous opacity monitoring system according to 40 CFR 60.13.

(c) Complete an initial evaluation of your continuous opacity monitoring system according to Performance Specification 1 in appendix B of 40 CFR part 60. Complete the evaluation within 60 days after your municipal waste combustion unit reaches the maximum load level at which it will operate, but no more than 180 days after its initial startup.

(d) Complete each annual evaluation of your continuous opacity monitoring system no more than 13 months after the previous evaluation.

(e) Use tests conducted according to EPA Reference Method 9 in appendix A of 40 CFR part 60, as specified in 40 CFR 60.1300, to determine compliance with the opacity limit in table 1 of 40 CFR part 60, subpart AAAA. The data obtained from your continuous opacity monitoring system are not used to determine compliance with the opacity limit.

[40 CFR 60.1270; s. 285.65(13), Wis. Stats.]

(60.1275) *Additional requirements for the operation of continuous emission monitoring systems and continuous opacity monitoring systems*
Use the required span values and applicable performance specifications in table 4 of 40 CFR part 60, subpart AAAA.

[40 CFR 60.1275; s. 285.65(13), Wis. Stats.]

(60.1280) *Requirements for meeting the data collection requirements when continuous emission monitoring systems are temporarily unavailable*
Refer to table 4 of 40 CFR part 60, subpart AAAA. It shows alternate methods for collecting data when systems malfunction or when repairs, calibration checks, or zero and span checks keep you from collecting the minimum amount of data.

[40 CFR 60.1280; s. 285.65(13), Wis. Stats.]

(60.1285) *Types of stack tests that must be conducted*
Conduct initial and annual stack tests to measure the emission levels of dioxins/furans, cadmium, lead, mercury, particulate matter, opacity, hydrogen chloride, and fugitive ash.

[40 CFR 60.1285; s. 285.65(130, Wis. Stats.]

A. Stack S10: Processes I40 & I41 – Two Consumat dual chambered, stepped hearth, modular starved air municipal waste combustion units with energy recovery, combined combustion capacity of 100 tons per day to be increased to 150 tons per day under 20-BAP-152
Control Device C01 – Acid gas removal system consisting of a lime and powder activated carbon flue gas injection system to be upgraded to a circulating fluid bed scrubber and two cyclones under 20-BAP-152
Control Device C02 – Baghouse

8. New Source Performance Standards (NSPS) for Small Municipal Waste Combustion Units for Which Construction is Commenced After August 30, 1999 or for Which Modification or Reconstruction is Commenced After June 6, 2001. [40 CFR Part 60, Subpart AAAA, as last amended 12/06/2000]

The permit condition numbers in this section of the permit are the associated provision numbers from the relevant standard as they appear in the above referenced Part and Subpart of Title 40 of the Code of Federal Regulations. References to provisions of 40 CFR contained within the permit conditions reference permit conditions with the same number as the referenced provision.

a. Requirements

(60.1290) *Use of stack test data*

You must use results of stack tests for dioxins/furans, cadmium, lead, mercury, particulate matter, opacity, hydrogen chloride, and fugitive ash to demonstrate compliance with the emission limits in table 1 of 40 CFR part 60, subpart AAAA. To demonstrate compliance for carbon monoxide and sulfur dioxide, see 40 CFR 60.1235.

[40 CFR 60.1290; s. 285.65(13), Wis. Stats.]

(60.1295) *Schedule for the stack testing*

(a) Conduct initial stack tests for the pollutants listed in 40 CFR 60.1285 within 60 days after your municipal waste combustion unit reaches the maximum load level at which it will operate, but no later than 180 days after its initial startup.

(b) Conduct annual stack tests for the same pollutants after the initial stack test. Conduct each annual stack test no later than 13 months after the previous stack test.

[40 CFR 60.1295; s. 285.65(13), Wis. Stats.]

(60.1300) *Test methods that must be used to stack test*

(a) Follow table 5 of 40 CFR part 60, subpart AAAA, to establish the sampling location and to determine pollutant concentrations, number of traverse points, individual test methods, and other specific testing requirements for the different pollutants.

Table 5 to Subpart AAAA of Part 60 – Requirements for Stack Tests

To measure the following pollutants	Use the following methods in appendix A of 40 CFR part 60 to determine the sampling location	Use the methods in appendix A of4 0 CFR part 60 to measure pollutant concentration	Also note the following additional information
1. Organics:			
Dioxins/Furans	Method 1	Method 23[a]	The minimum sampling time must be 4 hours per test run while the municipal waste combustion unit is operating at full load.

A. Stack S10: Processes I40 & I41 – Two Consumat dual chambered, stepped hearth, modular starved air municipal waste combustion units with energy recovery, combined combustion capacity of 100 tons per day to be increased to 150 tons per day under 20-BAP-152
Control Device C01 – Acid gas removal system consisting of a lime and powder activated carbon flue gas injection system to be upgraded to a circulating fluid bed scrubber and two cyclones under 20-BAP-152
Control Device C02 – Baghouse

8. New Source Performance Standards (NSPS) for Small Municipal Waste Combustion Units for Which Construction is Commenced After August 30, 1999 or for Which Modification or Reconstruction is Commenced After June 6, 2001. [40 CFR Part 60, Subpart AAAA, as last amended 12/06/2000]

The permit condition numbers in this section of the permit are the associated provision numbers from the relevant standard as they appear in the above referenced Part and Subpart of Title 40 of the Code of Federal Regulations. References to provisions of 40 CFR contained within the permit conditions reference permit conditions with the same number as the referenced provision.

a. Requirements

2. Metals:			
Cadmium	Method 1	Method 29[a]	Compliance testing must be performed while the municipal waste combustion unit is operating at full load.
Lead	Method 1	Method 29[a]	Compliance testing must be performed while the municipal waste combustion unit is operating at full load.
Mercury	Method 1	Method 29[a]	Compliance testing must be performed while the municipal waste combustion unit is operating at full load.
Opacity	Method 9	Method 9	Use Method 9 to determine compliance with opacity limit. 3-hour observation period (thirty 6-minute averages).
Particulate Matter	Method 1	Method 5[a]	The minimum sample Matter volume must be 1.0 cubic meters. The probe and filter holder heating systems in the sample train must be set to provide a gas temperature no greater than 160 ±14 °C. The minimum sampling time is 1 hour.
3. Acid Gases: [b]			
Hydrogen Chloride	Method 1	Method 26 or 26A[a]	Test runs must be at least 1 hour long while the municipal waste combustion unit is operating at full load.

A. Stack S10: Processes I40 & I41 – Two Consumat dual chambered, stepped hearth, modular starved air municipal waste combustion units with energy recovery, combined combustion capacity of 100 tons per day to be increased to 150 tons per day under 20-BAP-152
Control Device C01 – Acid gas removal system consisting of a lime and powder activated carbon flue gas injection system to be upgraded to a circulating fluid bed scrubber and two cyclones under 20-BAP-152
Control Device C02 – Baghouse

8. New Source Performance Standards (NSPS) for Small Municipal Waste Combustion Units for Which Construction is Commenced After August 30, 1999 or for Which Modification or Reconstruction is Commenced After June 6, 2001. [40 CFR Part 60, Subpart AAAA, as last amended 12/06/2000]

The permit condition numbers in this section of the permit are the associated provision numbers from the relevant standard as they appear in the above referenced Part and Subpart of Title 40 of the Code of Federal Regulations. References to provisions of 40 CFR contained within the permit conditions reference permit conditions with the same number as the referenced provision.

a. Requirements

4. Other: [b]			
Fugitive Ash	Not applicable	Method 22 (visible emissions)	The three 1-hour observation period must include periods when the facility transfers fugitive ash from the municipal waste combustion unit to the area where the fugitive ash is stored or loaded into containers or trucks.

[a] Must simultaneously measure oxygen (or carbon dioxide) using Method 3A or 3B in appendix A of this part.

[b] Use CEMS to test sulfur dioxide, nitrogen oxide, and carbon monoxide. Stack tests are not required except for quality assurance requirements in appendix F of this part.

(b) Make sure that stack tests for all the pollutants consist of at least three test runs, as specified in 40 CFR 60.8. Use the average of the pollutant emission concentrations from the three test runs to determine compliance with the emission limits in table 1 of 40 CFR part 60, subpart AAAA.

(c) Obtain an oxygen (or carbon dioxide) measurement at the same time as your pollutant measurements to determine diluent gas levels, as specified in 40 CFR 60.1230.

(d) Use the equations in 40 CFR 60.1460(a) to calculate emission levels at 7 percent oxygen (or an equivalent carbon dioxide basis), the percent reduction in potential hydrogen chloride emissions, and the reduction efficiency for mercury emissions. See the individual test methods in table 5 of 40 CFR part 60, subpart AAAA, for other required equations.

(e) You can apply to the Administrator for approval under 40 CFR 60.8(b) to use a reference method with minor changes in methodology, use an equivalent method, use an alternative method the results of which the Administrator has determined are adequate for demonstrating compliance, waive the requirement for a performance test because you have demonstrated by other means that you are in compliance, or use a shorter sampling time or smaller sampling volume.

[40 CFR 60.1300 and Table 5 to 40 CFR part 60, subpart AAAA; s. 285.65(13), Wis. Stats.]

(60.1305) *Requirements for conducting stack testing less often*

(a) You may test less often if all stack tests for a given pollutant over 3 consecutive years show you comply with the emission limit. In that case, you are not required to conduct a stack test for that pollutant for the next 2 years. However, you must conduct another stack test within 36 months of the anniversary date of the third consecutive stack test that shows you comply with the emission limit. Thereafter, you must perform stack tests every 3rd year but no later than 36 months following the previous stack tests. If a stack test shows noncompliance with an emission limit, you must conduct annual stack tests for that pollutant

A. Stack S10: Processes I40 & I41 – Two Consumat dual chambered, stepped hearth, modular starved air municipal waste combustion units with energy recovery, combined combustion capacity of 100 tons per day to be increased to 150 tons per day under 20-BAP-152
Control Device C01 – Acid gas removal system consisting of a lime and powder activated carbon flue gas injection system to be upgraded to a circulating fluid bed scrubber and two cyclones under 20-BAP-152
Control Device C02 – Baghouse

8. New Source Performance Standards (NSPS) for Small Municipal Waste Combustion Units for Which Construction is Commenced After August 30, 1999 or for Which Modification or Reconstruction is Commenced After June 6, 2001. [40 CFR Part 60, Subpart AAAA, as last amended 12/06/2000]

The permit condition numbers in this section of the permit are the associated provision numbers from the relevant standard as they appear in the above referenced Part and Subpart of Title 40 of the Code of Federal Regulations. References to provisions of 40 CFR contained within the permit conditions reference permit conditions with the same number as the referenced provision.

a. Requirements

until all stack tests over 3 consecutive years show compliance with the emission limit for that pollutant. The provision applies to all pollutants subject to stack testing requirements: dioxins/furans, cadmium, lead, mercury, particulate matter, opacity, hydrogen chloride, and fugitive ash.

(b) You can test less often for dioxins/furans emissions if you own or operate a municipal waste combustion plant that meets two conditions. First, you have multiple municipal waste combustion units onsite that are subject to this subpart. Second, all those municipal waste combustion units have demonstrated levels of dioxins/furans emissions less than or equal to 7 nanograms per dry standard cubic meter (total mass) for 2 consecutive years. In that case, you may choose to conduct annual stack tests on only one municipal waste combustion unit per year at your plant. The provision only applies to stack testing for dioxins/furans emissions.

(1) Conduct the stack test no more than 13 months following a stack test on any municipal waste combustion unit subject to this subpart at your plant. Each year, test a different municipal waste combustion unit subject to this subpart and test all municipal waste combustion units subject to this subpart in a sequence that you determine. Once you determine a testing sequence, it must not be changed without approval by the Administrator.

(2) If each annual stack test shows levels of dioxins/furans emissions less than or equal to 7 nanograms per dry standard cubic meter (total mass), you may continue stack tests on only one municipal waste combustion unit subject to this subpart per year.

(3) If any annual stack test indicates levels of dioxins/furans emissions greater than 7 nanograms per dry standard cubic meter (total mass), conduct subsequent annual stack tests on all municipal waste combustion units subject to this subpart at your plant. You may return to testing one municipal waste combustion unit subject to this subpart per year if you can demonstrate dioxins/furans emission levels less than or equal to 7 nanograms per dry standard cubic meter (total mass) for all municipal waste combustion units at your plant subject to this subpart for 2 consecutive years.

[40 CFR 60.1305; s. 285.65(13), Wis. Stats.]

(60.1310) *Requirements for deviating from the 13-month testing schedule if unforeseen circumstances arise*
You may not deviate from the 13-month testing schedules specified in 40 CFR 60.1295(b) and 60.1305(b)(1) unless you apply to the Administrator for an alternative schedule, and the Administrator approves your request for alternate scheduling prior to the date on which you would otherwise have been required to conduct the next stack test.

[40 CFR 60.1310; s. 285.65(130, Wis. Stats.]

(60.1315) *Other requirements for continuous monitoring*
You must also monitor three operating parameters:

(a) Load level of each municipal waste combustion unit.

(b) Temperature of flue gases at the inlet of your particulate matter air pollution control device.

A. Stack S10: Processes I40 & I41 – Two Consumat dual chambered, stepped hearth, modular starved air municipal waste combustion units with energy recovery, combined combustion capacity of 100 tons per day to be increased to 150 tons per day under 20-BAP-152
Control Device C01 – Acid gas removal system consisting of a lime and powder activated carbon flue gas injection system to be upgraded to a circulating fluid bed scrubber and two cyclones under 20-BAP-152
Control Device C02 – Baghouse

8. New Source Performance Standards (NSPS) for Small Municipal Waste Combustion Units for Which Construction is Commenced After August 30, 1999 or for Which Modification or Reconstruction is Commenced After June 6, 2001. [40 CFR Part 60, Subpart AAAA, as last amended 12/06/2000]

The permit condition numbers in this section of the permit are the associated provision numbers from the relevant standard as they appear in the above referenced Part and Subpart of Title 40 of the Code of Federal Regulations. References to provisions of 40 CFR contained within the permit conditions reference permit conditions with the same number as the referenced provision.

a. Requirements

(c) Carbon feed rate if activated carbon is used to control dioxins/furans or mercury emissions.

[40 CFR 60.1315; s. 285.65(13), Wis. Stats.]

(60.1320) *Monitoring the load of municipal waste combustion units*

(a) If your municipal waste combustion unit generates steam, you must install, calibrate, maintain, and operate a steam flowmeter and meet five requirements:

(1) Continuously measure and record the measurements of steam in kilograms (or pounds) per hour.

(2) Calculate your steam flow in 4-hour block averages.

(3) Calculate the steam flow rate using the method in "American Society of Mechanical Engineers Power Test Codes: Test Code for Steam Generating Units, Power Test Code 4.1—1964 (R1991)," section 4 (incorporated by reference in 40 CFR 60.17(h)(2)).

(4) Design, construct, install, calibrate, and use nozzles or orifices for flow rate measurements, using the recommendations in "American Society of Mechanical Engineers Interim Supplement 19.5 on Instruments and Apparatus: Application, part II of Fluid Meters," 6th Edition (1971), chapter 4 (incorporated by reference in 40 CFR 60.17(h)(3)).

(5) Before each dioxins/furans stack test, or at least once a year, calibrate all signal conversion elements associated with steam flow measurements according to the manufacturer instructions.

(b) *[Intentionally left blank]*

[40 CFR 60.1320; s. 285.65(13), Wis. Stats.]

(60.1325) *Monitoring the temperature of flue gases at the inlet of the particulate matter control device*

You must install, calibrate, maintain, and operate a device to continuously measure the temperature of the flue gas stream at the inlet of each particulate matter control device.

[40 CFR 60.1325; s. 285.65(13), Wis. Stats.]

(60.1330) *Monitoring the injection rate of activated carbon*

If your municipal waste combustion unit uses activated carbon to control dioxins/furans or mercury emissions, you must meet three requirements:

(a) Select a carbon injection system operating parameter that can be used to calculate carbon feed rate (for example, screw feeder speed).

(b) During each dioxins/furans and mercury stack test, determine the average carbon feed rate in kilograms (or pounds) per hour. Also, determine the average operating parameter level that correlates to the carbon feed rate. Establish a relationship between the operating parameter and the carbon feed rate in order to calculate the carbon feed rate based on the operating parameter level.

A. Stack S10: Processes I40 & I41 – Two Consumat dual chambered, stepped hearth, modular starved air municipal waste combustion units with energy recovery, combined combustion capacity of 100 tons per day to be increased to 150 tons per day under 20-BAP-152
Control Device C01 – Acid gas removal system consisting of a lime and powder activated carbon flue gas injection system to be upgraded to a circulating fluid bed scrubber and two cyclones under 20-BAP-152
Control Device C02 – Baghouse

8. New Source Performance Standards (NSPS) for Small Municipal Waste Combustion Units for Which Construction is Commenced After August 30, 1999 or for Which Modification or Reconstruction is Commenced After June 6, 2001. [40 CFR Part 60, Subpart AAAA, as last amended 12/06/2000]

The permit condition numbers in this section of the permit are the associated provision numbers from the relevant standard as they appear in the above referenced Part and Subpart of Title 40 of the Code of Federal Regulations. References to provisions of 40 CFR contained within the permit conditions reference permit conditions with the same number as the referenced provision.

a. Requirements

(c) Continuously monitor the selected operating parameter during all periods when the municipal waste combustion unit is operating and combusting waste, and calculate the 8-hour block average carbon feed rate in kilograms (or pounds) per hour, based on the selected operating parameter. When calculating the 8-hour block average, do two things:

(1) Exclude hours when the municipal waste combustion unit is not operating.

(2) Include hours when the municipal waste combustion unit is operating but the carbon feed system is not working correctly.

[40 CFR 60.1330; s. 285.65(13), Wis. Stats.]

(60.1335) *Minimum amount of monitoring data that must be collected with continuous parameter monitoring systems*

(a) Where continuous parameter monitoring systems are used, obtain 1-hour arithmetic averages for three parameters:

(1) Load level of the municipal waste combustion unit.

(2) Temperature of the flue gases at the inlet of your particulate matter control device.

(3) Carbon feed rate if activated carbon is used to control dioxins/furans or mercury emissions.

(b) Obtain at least two data points per hour in order to calculate a valid 1-hour arithmetic average.

(c) Obtain valid 1-hour averages for at least 75 percent of the operating hours per day for 90 percent of the operating days per calendar quarter. An operating day is any day the unit combusts any municipal solid waste or refuse-derived fuel.

(d) If you do not obtain the minimum data required in paragraphs (a) through (c) of this section, you are in violation of the data collection requirement and you must notify the Administrator according to 40 CFR 60.1410(e).

[40 CFR 60.1335; s. 285.65(13), Wis. Stats.]

(60.1340) *Required records*

You must keep five types of records:

(a) Materials separation plan and siting analysis.

(b) Operator training and certification.

(c) Stack tests.

(d) Continuously monitored pollutants and parameters.

(e) Carbon feed rate.

A. Stack S10: Processes I40 & I41 – Two Consumat dual chambered, stepped hearth, modular starved air municipal waste combustion units with energy recovery, combined combustion capacity of 100 tons per day to be increased to 150 tons per day under 20-BAP-152
Control Device C01 – Acid gas removal system consisting of a lime and powder activated carbon flue gas injection system to be upgraded to a circulating fluid bed scrubber and two cyclones under 20-BAP-152
Control Device C02 – Baghouse

8. New Source Performance Standards (NSPS) for Small Municipal Waste Combustion Units for Which Construction is Commenced After August 30, 1999 or for Which Modification or Reconstruction is Commenced After June 6, 2001. [40 CFR Part 60, Subpart AAAA, as last amended 12/06/2000]

The permit condition numbers in this section of the permit are the associated provision numbers from the relevant standard as they appear in the above referenced Part and Subpart of Title 40 of the Code of Federal Regulations. References to provisions of 40 CFR contained within the permit conditions reference permit conditions with the same number as the referenced provision.

a. Requirements

[40 CFR 60.1340; s. 285.65(13), Wis. Stats.]

(60.1345) *Record location and retention*

(a) Keep all records onsite in paper copy or electronic format unless the Administrator approves another format.

(b) Keep all records on each municipal waste combustion unit for at least 5 years.

(c) Make all records available for submittal to the Administrator and the Department, or for onsite review by an inspector.

[40 CFR 60.1345; s. 285.65(13), Wis. Stats.]

(60.1350) *[Intentionally left blank]*

(60.1355) *Records operator training and certification*
You must keep records of six items:

(a) *Records of provisional certifications.* Include three items:

(1) For your municipal waste combustion plant, names of the chief facility operator, shift supervisors, and control room operators who are provisionally certified by the American Society of Mechanical Engineers or an equivalent State-approved certification program.

(2) Dates of the initial provisional certifications.

(3) Documentation showing current provisional certifications.

(b) *Records of full certifications.* Include three items:

(1) For your municipal waste combustion plant, names of the chief facility operator, shift supervisors, and control room operators who are fully certified by the American Society of Mechanical Engineers or an equivalent State-approved certification program.

(2) Dates of initial and renewal full certifications.

(3) Documentation showing current full certifications.

(c) *Records showing completion of the operator training course.* Include three items:

(1) For your municipal waste combustion plant, names of the chief facility operator, shift supervisors, and control room operators who have completed the EPA or State municipal waste combustion operator training course.

(2) Dates of completion of the operator training course.

(3) Documentation showing completion of the operator training course.

A. Stack S10: Processes I40 & I41 – Two Consumat dual chambered, stepped hearth, modular starved air municipal waste combustion units with energy recovery, combined combustion capacity of 100 tons per day to be increased to 150 tons per day under 20-BAP-152
Control Device C01 – Acid gas removal system consisting of a lime and powder activated carbon flue gas injection system to be upgraded to a circulating fluid bed scrubber and two cyclones under 20-BAP-152
Control Device C02 – Baghouse

8. New Source Performance Standards (NSPS) for Small Municipal Waste Combustion Units for Which Construction is Commenced After August 30, 1999 or for Which Modification or Reconstruction is Commenced After June 6, 2001. [40 CFR Part 60, Subpart AAAA, as last amended 12/06/2000]

The permit condition numbers in this section of the permit are the associated provision numbers from the relevant standard as they appear in the above referenced Part and Subpart of Title 40 of the Code of Federal Regulations. References to provisions of 40 CFR contained within the permit conditions reference permit conditions with the same number as the referenced provision.

a. Requirements

(d) *Records of reviews for plant-specific operating manuals.* Include three items:

(1) Names of persons who have reviewed the operating manual.

(2) Date of the initial review.

(3) Dates of subsequent annual reviews.

(e) *Records of when a certified operator is temporarily offsite.* Include two main items:

(1) If the certified chief facility operator and certified shift supervisor are offsite for more than 12 hours, but for 2 weeks or less, and no other certified operator is onsite, record the dates that the certified chief facility operator and certified shift supervisor were offsite.

(2) When the certified chief facility operator and certified shift supervisor are offsite for more than 2 weeks and no other certified operator is onsite, keep records of four items:

(i) Your notice that all certified persons are offsite.

(ii) The conditions that cause those people to be offsite.

(iii) The corrective actions you are taking to ensure a certified chief facility operator or certified shift supervisor is onsite.

(iv) Copies of the written reports submitted every 4 weeks that summarize the actions taken to ensure that a certified chief facility operator or certified shift supervisor will be onsite.

(f) *Records of calendar dates.* Include the calendar date on each record.

[40 CFR 60.1355; s. 285.65(13), Wis. Stats.]

(60.1360) *Records for stack tests*

For stack tests required under 40 CFR 60.1285, you must keep records of four items:

(a) The results of the stack tests for eight pollutants or parameters recorded in the appropriate units of measure specified in table 1 of 40 CFR part 60, subpart AAAA:

(1) Dioxins/furans.

(2) Cadmium.

(3) Lead.

(4) Mercury.

(5) Opacity.

A. Stack S10: Processes I40 & I41 – Two Consumat dual chambered, stepped hearth, modular starved air municipal waste combustion units with energy recovery, combined combustion capacity of 100 tons per day to be increased to 150 tons per day under 20-BAP-152
Control Device C01 – Acid gas removal system consisting of a lime and powder activated carbon flue gas injection system to be upgraded to a circulating fluid bed scrubber and two cyclones under 20-BAP-152
Control Device C02 – Baghouse

8. New Source Performance Standards (NSPS) for Small Municipal Waste Combustion Units for Which Construction is Commenced After August 30, 1999 or for Which Modification or Reconstruction is Commenced After June 6, 2001. [40 CFR Part 60, Subpart AAAA, as last amended 12/06/2000]

The permit condition numbers in this section of the permit are the associated provision numbers from the relevant standard as they appear in the above referenced Part and Subpart of Title 40 of the Code of Federal Regulations. References to provisions of 40 CFR contained within the permit conditions reference permit conditions with the same number as the referenced provision.

a. Requirements

(6) Particulate matter.

(7) Hydrogen chloride.

(8) Fugitive ash.

(b) Test reports including supporting calculations that document the results of all stack tests.

(c) The maximum demonstrated load of your municipal waste combustion units and maximum temperature at the inlet of your particulate matter control device during all stack tests for dioxins/furans emissions.

(d) The calendar date of each record.

[40 CFR 60.1360; s. 285.65(13), Wis. Stats.]

(60.1365) *Records for continuously monitored pollutants or parameters*
You must keep records of eight items:

(a) *Records of monitoring data.* Document five parameters measured using continuous monitoring systems:

(1) All 6-minute average levels of opacity.

(2) All 1-hour average concentrations of sulfur dioxide emissions.

(3) *[Intentionally left blank]*

(4) All 1-hour average concentrations of carbon monoxide emissions.

(5) All 1-hour average load levels of your municipal waste combustion unit.

(6) All 1-hour average flue gas temperatures at the inlet of the particulate matter control device.

(b) *Records of average concentrations and percent reductions.* Document four parameters:

(1) All 24-hour daily block geometric average concentrations of sulfur dioxide emissions or average percent reductions of sulfur dioxide emissions.

(2) *[Intentionally left blank]*

(3) All 4-hour block or 24-hour daily block arithmetic average concentrations of carbon monoxide emissions.

(4) All 4-hour block arithmetic average load levels of your municipal waste combustion unit.

(5) All 4-hour block arithmetic average flue gas temperatures at the inlet of the particulate matter control device.

(c) *Records of exceedances.* Document three items:

A. Stack S10: Processes I40 & I41 – Two Consumat dual chambered, stepped hearth, modular starved air municipal waste combustion units with energy recovery, combined combustion capacity of 100 tons per day to be increased to 150 tons per day under 20-BAP-152
Control Device C01 – Acid gas removal system consisting of a lime and powder activated carbon flue gas injection system to be upgraded to a circulating fluid bed scrubber and two cyclones under 20-BAP-152
Control Device C02 – Baghouse

8. New Source Performance Standards (NSPS) for Small Municipal Waste Combustion Units for Which Construction is Commenced After August 30, 1999 or for Which Modification or Reconstruction is Commenced After June 6, 2001. [40 CFR Part 60, Subpart AAAA, as last amended 12/06/2000]

The permit condition numbers in this section of the permit are the associated provision numbers from the relevant standard as they appear in the above referenced Part and Subpart of Title 40 of the Code of Federal Regulations. References to provisions of 40 CFR contained within the permit conditions reference permit conditions with the same number as the referenced provision.

a. Requirements

(1) Calendar dates whenever any of the five pollutant or parameter levels recorded in paragraph (b) of this section or the opacity level recorded in paragraph (a)(1) of this section did not meet the emission limits or operating levels specified in this subpart.

(2) Reasons you exceeded the applicable emission limits or operating levels.

(3) Corrective actions you took, or are taking, to meet the emission limits or operating levels.

(d) *Records of minimum data.* Document three items:

(1) Calendar dates for which you did not collect the minimum amount of data required under 40 CFR 60.1260 and 60.1335. Record the dates for four types of pollutants and parameters:

(i) Sulfur dioxide emissions.

(ii) *[Intentionally left blank]*

(iii) Carbon monoxide emissions.

(iv) Load levels of your municipal waste combustion unit.

(v) Temperatures of the flue gases at the inlet of the particulate matter control device.

(2) Reasons you did not collect the minimum data.

(3) Corrective actions you took, or are taking, to obtain the required amount of data.

(e) *Records of exclusions.* Document each time you have excluded data from your calculation of averages for any of the following four pollutants or parameters and the reasons the data were excluded:

(1) Sulfur dioxide emissions.

(2) *[Intentionally left blank]*

(3) Carbon monoxide emissions.

(4) Load levels of your municipal waste combustion unit.

(5) Temperatures of the flue gases at the inlet of the particulate matter control device.

(f) *Records of drift and accuracy.* Document the results of your daily drift tests and quarterly accuracy determinations according to Procedure 1 of appendix F of 40 CFR part 60. Keep the records for the sulfur dioxide and carbon monoxide continuous emissions monitoring systems.

(g) *[Intentionally left blank]*

(h) *Records of calendar dates.* Include the calendar date on each record.

A. Stack S10: Processes I40 & I41 – Two Consumat dual chambered, stepped hearth, modular starved air municipal waste combustion units with energy recovery, combined combustion capacity of 100 tons per day to be increased to 150 tons per day under 20-BAP-152
Control Device C01 – Acid gas removal system consisting of a lime and powder activated carbon flue gas injection system to be upgraded to a circulating fluid bed scrubber and two cyclones under 20-BAP-152
Control Device C02 – Baghouse

8. New Source Performance Standards (NSPS) for Small Municipal Waste Combustion Units for Which Construction is Commenced After August 30, 1999 or for Which Modification or Reconstruction is Commenced After June 6, 2001. [40 CFR Part 60, Subpart AAAA, as last amended 12/06/2000]

The permit condition numbers in this section of the permit are the associated provision numbers from the relevant standard as they appear in the above referenced Part and Subpart of Title 40 of the Code of Federal Regulations. References to provisions of 40 CFR contained within the permit conditions reference permit conditions with the same number as the referenced provision.

a. Requirements

[40 CFR 60.1365(a)(1)-(2), (a)(4)-(6), (b)(1), (b)(3)-(5), (c), (d)(1)(i), (d)(1)(iii)-(v), (d)(2)-(3), (e)(1), (e)(3)-(5), (f), (h); s. 285.65(13), Wis. Stats.]

(60.1370) *Records for municipal waste combustion units that use activated carbon*
For municipal waste combustion units that use activated carbon to control dioxins/furans or mercury emissions, you must keep records of five items:

(a) *Records of average carbon feed rate.* Document five items:

(1) Average carbon feed rate in kilograms (or pounds) per hour during all stack tests for dioxins/furans and mercury emissions. Include supporting calculations in the records.

(2) For the operating parameter chosen to monitor carbon feed rate, average operating level during all stack tests for dioxins/furans and mercury emissions. Include supporting data that document the relationship between the operating parameter and the carbon feed rate.

(3) All 8-hour block average carbon feed rates in kilograms (or pounds) per hour calculated from the monitored operating parameter.

(4) Total carbon purchased and delivered to the municipal waste combustion plant for each calendar quarter. If you choose to evaluate total carbon purchased and delivered on a municipal waste combustion unit basis, record the total carbon purchased and delivered for each individual municipal waste combustion unit at your plant. Include supporting documentation.

(5) Required quarterly usage of carbon for the municipal waste combustion plant, calculated using equation 4 or 5 in 40 CFR 60.1460(f). If you choose to evaluate required quarterly usage for carbon on a municipal waste combustion unit basis, record the required quarterly usage for each municipal waste combustion unit at your plant. Include supporting calculations.

(b) *Records of low carbon feed rates.* Document three items:

(1) The calendar dates when the average carbon feed rate over an 8-hour block was less than the average carbon feed rates determined during the most recent stack test for dioxins/furans or mercury emissions (whichever has a higher feed rate).

(2) Reasons for the low carbon feed rates.

(3) Corrective actions you took or are taking to meet the 8-hour average carbon feed rate requirement.

(c) *Records of minimum carbon feed rate data.* Document three items:

(1) Calendar dates for which you did not collect the minimum amount of carbon feed rate data required under §60.1335.

(2) Reasons you did not collect the minimum data.

(3) Corrective actions you took or are taking to get the required amount of data.

(d) *Records of exclusions.* Document each time you have excluded data from your calculation of average carbon feed rates and the reasons the data were excluded.

A. Stack S10: Processes I40 & I41 – Two Consumat dual chambered, stepped hearth, modular starved air municipal waste combustion units with energy recovery, combined combustion capacity of 100 tons per day to be increased to 150 tons per day under 20-BAP-152
Control Device C01 – Acid gas removal system consisting of a lime and powder activated carbon flue gas injection system to be upgraded to a circulating fluid bed scrubber and two cyclones under 20-BAP-152
Control Device C02 – Baghouse

8. New Source Performance Standards (NSPS) for Small Municipal Waste Combustion Units for Which Construction is Commenced After August 30, 1999 or for Which Modification or Reconstruction is Commenced After June 6, 2001. [40 CFR Part 60, Subpart AAAA, as last amended 12/06/2000]

The permit condition numbers in this section of the permit are the associated provision numbers from the relevant standard as they appear in the above referenced Part and Subpart of Title 40 of the Code of Federal Regulations. References to provisions of 40 CFR contained within the permit conditions reference permit conditions with the same number as the referenced provision.

a. Requirements

(e) *Records of calendar dates.* Include the calendar date on each record.

[40 CFR 60.1370; s. 285.65(13), Wis. Stats.]

(60.1375) *[Intentionally left blank]*

(60.1380) *Items that must be included in the notice of construction*

(a) Include ten items:

(1) A statement of your intent to construct the municipal waste combustion unit.

(2) The planned initial startup date of your municipal waste combustion unit.

(3) The types of fuels you plan to combust in your municipal waste combustion unit.

(4) The capacity of your municipal waste combustion unit including supporting capacity calculations, as specified in 40 CFR 60.1460(d) and (e).

(5)-(10) *[Intentionally left blank]*

(b) Submit your notice of construction no later than 30 days after you commence construction, reconstruction, or modification of your municipal waste combustion unit.

[40 CFR 60.1380(a)(1)-(5) and (b); s. 285.65(13), Wis. Stats.]

(60.1385) *Reports that must be submitted after the submittal of the notice of construction*

(a) Submit an initial report and annual reports, plus semiannual reports for any emission or parameter level that does not meet the limits specified in 40 CFR part 60, subpart AAAA.

(b) Submit all reports on paper, postmarked on or before the submittal dates in 40 CFR 60.1395, 60.1405, and 60.1420. If the Administrator agrees, you may submit electronic reports.

(c) Keep a copy of all reports required by 40 CFR 60.1400, 60.1410, and 60.1425 onsite for 5 years.

[40 CFR 60.1385; s. 285.65(13), Wis. Stats.]

(60.1390) *Appropriate units of measurement for reporting data*

See tables 1 and 2 of 40 CFR part 60, subpart AAAA, for appropriate units of measurement.

[40 CFR 60.1390; s. 285.65(13), Wis. Stats.]

A. Stack S10: Processes I40 & I41 – Two Consumat dual chambered, stepped hearth, modular starved air municipal waste combustion units with energy recovery, combined combustion capacity of 100 tons per day to be increased to 150 tons per day under 20-BAP-152
Control Device C01 – Acid gas removal system consisting of a lime and powder activated carbon flue gas injection system to be upgraded to a circulating fluid bed scrubber and two cyclones under 20-BAP-152
Control Device C02 – Baghouse

8. New Source Performance Standards (NSPS) for Small Municipal Waste Combustion Units for Which Construction is Commenced After August 30, 1999 or for Which Modification or Reconstruction is Commenced After June 6, 2001. [40 CFR Part 60, Subpart AAAA, as last amended 12/06/2000]

The permit condition numbers in this section of the permit are the associated provision numbers from the relevant standard as they appear in the above referenced Part and Subpart of Title 40 of the Code of Federal Regulations. References to provisions of 40 CFR contained within the permit conditions reference permit conditions with the same number as the referenced provision.

a. Requirements

(60.1395) *Submittal of the initial report*
As specified in 40 CFR 60.7(c), submit your initial report within 60 days after your municipal waste combustion unit reaches the maximum load level at which it will operate, but no later than 180 days after its initial startup.

[40 CFR 60.1395; s. 285.65(13), Wis. Stats.]

(60.1400) *Items that must be included in the initial report*
You must include seven items:

(a) The emission levels measured on the date of the initial evaluation of your continuous emission monitoring systems for all of the following four pollutants or parameters as recorded in accordance with 40 CFR 60.1365(b).

(1) The 24-hour daily geometric average concentration of sulfur dioxide emissions or the 24-hour daily geometric percent reduction of sulfur dioxide emissions.

(2) *[Intentionally left blank]*

(3) The 4-hour block or 24-hour daily arithmetic average concentration of carbon monoxide emissions.

(4) The 4-hour block arithmetic average load level of your municipal waste combustion unit.

(5) The 4-hour block arithmetic average flue gas temperature at the inlet of the particulate matter control device.

(b) The results of the initial stack tests for eight pollutants or parameters (use appropriate units as specified in table 2 of 40 CFR part 60, subpart AAAA):

(1) Dioxins/furans.

(2) Cadmium.

(3) Lead.

(4) Mercury.

(5) Opacity.

(6) Particulate matter.

(7) Hydrogen chloride.

(8) Fugitive ash.

(c) The test report that documents the initial stack tests including supporting calculations.

(d) The initial performance evaluation of your continuous emissions monitoring systems. Use the applicable performance specifications in appendix B of 40 CFR part 60 in conducting the evaluation.

A. Stack S10: Processes I40 & I41 – Two Consumat dual chambered, stepped hearth, modular starved air municipal waste combustion units with energy recovery, combined combustion capacity of 100 tons per day to be increased to 150 tons per day under 20-BAP-152
Control Device C01 – Acid gas removal system consisting of a lime and powder activated carbon flue gas injection system to be upgraded to a circulating fluid bed scrubber and two cyclones under 20-BAP-152
Control Device C02 – Baghouse

8. New Source Performance Standards (NSPS) for Small Municipal Waste Combustion Units for Which Construction is Commenced After August 30, 1999 or for Which Modification or Reconstruction is Commenced After June 6, 2001. [40 CFR Part 60, Subpart AAAA, as last amended 12/06/2000]

The permit condition numbers in this section of the permit are the associated provision numbers from the relevant standard as they appear in the above referenced Part and Subpart of Title 40 of the Code of Federal Regulations. References to provisions of 40 CFR contained within the permit conditions reference permit conditions with the same number as the referenced provision.

a. Requirements

(e) The maximum demonstrated load of your municipal waste combustion unit and the maximum demonstrated temperature of the flue gases at the inlet of the particulate matter control device. Use values established during your initial stack test for dioxins/furans emissions and include supporting calculations.

(f) If your municipal waste combustion unit uses activated carbon to control dioxins/furans or mercury emissions, the average carbon feed rates that you recorded during the initial stack tests for dioxins/furans and mercury emissions. Include supporting calculations as specified in 40 CFR 60.1370(a)(1) and (2).

(g) If you choose to monitor carbon dioxide instead of oxygen as a diluent gas, documentation of the relationship between oxygen and carbon dioxide, as specified in 40 CFR 60.1255.

[40 CFR 60.1400(a)(1), (a)(3)-(5), (b)-(g); s. 285.65(13), Wis. Stats.]

(60.1405) *Submittal of the annual report*
Submit the annual report no later than February 1 of each year that follows the calendar year in which you collected the data.

[40 CFR 60.1405; s. 285.65(13), Wis. Stats.]

(60.1410) *Items that must be included in the annual report*
Summarize data collected for all pollutants and parameters regulated under this subpart. Your summary must include twelve items:

(a) The results of the annual stack test, using appropriate units, for eight pollutants, as recorded under 40 CFR 60.1360(a):

(1) Dioxins/furans.
(2) Cadmium.
(3) Lead.
(4) Mercury.
(5) Particulate matter.
(6) Opacity.
(7) Hydrogen chloride.
(8) Fugitive ash.

(b) A list of the highest average levels recorded, in the appropriate units. List the values for four pollutants or parameters:

(1) Sulfur dioxide emissions.
(2) *[Intentionally left blank]*

A. Stack S10: Processes I40 & I41 – Two Consumat dual chambered, stepped hearth, modular starved air municipal waste combustion units with energy recovery, combined combustion capacity of 100 tons per day to be increased to 150 tons per day under 20-BAP-152
Control Device C01 – Acid gas removal system consisting of a lime and powder activated carbon flue gas injection system to be upgraded to a circulating fluid bed scrubber and two cyclones under 20-BAP-152
Control Device C02 – Baghouse

8. New Source Performance Standards (NSPS) for Small Municipal Waste Combustion Units for Which Construction is Commenced After August 30, 1999 or for Which Modification or Reconstruction is Commenced After June 6, 2001. [40 CFR Part 60, Subpart AAAA, as last amended 12/06/2000]

The permit condition numbers in this section of the permit are the associated provision numbers from the relevant standard as they appear in the above referenced Part and Subpart of Title 40 of the Code of Federal Regulations. References to provisions of 40 CFR contained within the permit conditions reference permit conditions with the same number as the referenced provision.

a. Requirements

(3) Carbon monoxide emissions.

(4) Load level of the municipal waste combustion unit.

(5) Temperature of the flue gases at the inlet of the particulate matter air pollution control device (4-hour block average).

(c) The highest 6-minute opacity level measured. Base the value on all 6-minute average opacity levels recorded by your continuous opacity monitoring system (40 CFR 60.1365(a)(1)).

(d) For municipal waste combustion units that use activated carbon for controlling dioxins/furans or mercury emissions, include four records:

(1) The average carbon feed rates recorded during the most recent dioxins/furans and mercury stack tests.

(2) The lowest 8-hour block average carbon feed rate recorded during the year.

(3) The total carbon purchased and delivered to the municipal waste combustion plant for each calendar quarter. If you choose to evaluate total carbon purchased and delivered on a municipal waste combustion unit basis, record the total carbon purchased and delivered for each individual municipal waste combustion unit at your plant.

(4) The required quarterly carbon usage of your municipal waste combustion plant calculated using equation 4 or 5 in 40 CFR 60.1460(f). If you choose to evaluate required quarterly usage for carbon on a municipal waste combustion unit basis, record the required quarterly usage for each municipal waste combustion unit at your plant.

(e) The total number of days that you did not obtain the minimum number of hours of data for five pollutants or parameters. Include the reasons you did not obtain the data and corrective actions that you have taken to obtain the data in the future. Include data on:

(1) Sulfur dioxide emissions.

(2) *[Intentionally left blank]*

(3) Carbon monoxide emissions.

(4) Load level of the municipal waste combustion unit.

(5) Temperature of the flue gases at the inlet of the particulate matter air pollution control device.

(6) Carbon feed rate.

(f) The number of hours you have excluded data from the calculation of average levels (include the reasons for excluding it). Include data for five pollutants or parameters:

(1) Sulfur dioxide emissions.

(2) *[Intentionally left blank]*

A. Stack S10: Processes I40 & I41 – Two Consumat dual chambered, stepped hearth, modular starved air municipal waste combustion units with energy recovery, combined combustion capacity of 100 tons per day to be increased to 150 tons per day under 20-BAP-152
Control Device C01 – Acid gas removal system consisting of a lime and powder activated carbon flue gas injection system to be upgraded to a circulating fluid bed scrubber and two cyclones under 20-BAP-152
Control Device C02 – Baghouse

8. New Source Performance Standards (NSPS) for Small Municipal Waste Combustion Units for Which Construction is Commenced After August 30, 1999 or for Which Modification or Reconstruction is Commenced After June 6, 2001. [40 CFR Part 60, Subpart AAAA, as last amended 12/06/2000]

The permit condition numbers in this section of the permit are the associated provision numbers from the relevant standard as they appear in the above referenced Part and Subpart of Title 40 of the Code of Federal Regulations. References to provisions of 40 CFR contained within the permit conditions reference permit conditions with the same number as the referenced provision.

a. Requirements

(3) Carbon monoxide emissions.

(4) Load level of the municipal waste combustion unit.

(5) Temperature of the flue gases at the inlet of the particulate matter air pollution control device.

(6) Carbon feed rate.

(g) A notice of your intent to begin a reduced stack testing schedule for dioxins/furans emissions during the following calendar year, if you are eligible for alternative scheduling (40 CFR 60.1305(a) or (b)).

(h) A notice of your intent to begin a reduced stack testing schedule for other pollutants during the following calendar year if you are eligible for alternative scheduling (40 CFR 60.1305(a)).

(i) A summary of any emission or parameter level that did not meet the limits specified in this subpart.

(j) A summary of the data in paragraphs (a) through (d) of this section from the year preceding the reporting year which gives the Administrator a summary of the performance of the municipal waste combustion unit over a 2-year period.

(k) *[Intentionally left blank]*

(l) Documentation of periods when all certified chief facility operators and certified shift supervisors are offsite for more than 12 hours.

[40 CFR 60.1410(a), (b)(1), (b)(3)-(5), (c)-(d), (e)(1), (e)(3)-(6), (f)(1), (f)(3)-(6), (h)-(j), (l); s. 285.65(13), Wis. Stats.]

(60.1415) *What you must do if you are out of compliance with the requirements of 40 CFR part 60, subpart AAAA*
You must submit a semiannual report on any recorded emission or parameter level that does not meet the requirements specified in 40 CFR part 60, subpart AAAA.

[40 CFR 60.1415; s. 285.65(13), Wis. Stats.]

(60.1420) *Requirements for semiannual reports*

(a) For data collected during the first half of a calendar year, submit your semiannual report by August 1 of that year.

(b) For data you collected during the second half of the calendar year, submit your semiannual report by February 1 of the following year.

[40 CFR 60.4120; s. 285.65(13), Wis. Stats.]

(60.1425) *Items that must be included in the semiannual out-of-compliance reports*
You must include three items in the semiannual report:

A. Stack S10: Processes I40 & I41 – Two Consumat dual chambered, stepped hearth, modular starved air municipal waste combustion units with energy recovery, combined combustion capacity of 100 tons per day to be increased to 150 tons per day under 20-BAP-152
Control Device C01 – Acid gas removal system consisting of a lime and powder activated carbon flue gas injection system to be upgraded to a circulating fluid bed scrubber and two cyclones under 20-BAP-152
Control Device C02 – Baghouse

8. New Source Performance Standards (NSPS) for Small Municipal Waste Combustion Units for Which Construction is Commenced After August 30, 1999 or for Which Modification or Reconstruction is Commenced After June 6, 2001. [40 CFR Part 60, Subpart AAAA, as last amended 12/06/2000]

The permit condition numbers in this section of the permit are the associated provision numbers from the relevant standard as they appear in the above referenced Part and Subpart of Title 40 of the Code of Federal Regulations. References to provisions of 40 CFR contained within the permit conditions reference permit conditions with the same number as the referenced provision.

a. Requirements

(a) For any of the following five pollutants or parameters that exceeded the limits specified in this subpart, include the calendar date they exceeded the limits, the averaged and recorded data for that date, the reasons for exceeding the limits, and your corrective actions:

(1) Concentration or percent reduction of sulfur dioxide emissions.

(2) *[Intentionally left blank]*

(3) Concentration of carbon monoxide emissions.

(4) Load level of your municipal waste combustion unit.

(5) Temperature of the flue gases at the inlet of your particulate matter air pollution control device.

(6) Average 6-minute opacity level. The data obtained from your continuous opacity monitoring system are not used to determine compliance with the limit on opacity emissions.

(b) If the results of your annual stack tests (as recorded in 40 CFR 60.1360(a)) show emissions above the limits specified in table 1 of 40 CFR part 60, subpart AAAA, for dioxins/furans, cadmium, lead, mercury, particulate matter, opacity, hydrogen chloride, and fugitive ash, include a copy of the test report that documents the emission levels and your corrective actions.

(c) For municipal waste combustion units that apply activated carbon to control dioxins/furans or mercury emissions, include two items:

(1) Documentation of all dates when the 8-hour block average carbon feed rate (calculated from the carbon injection system operating parameter) is less than the highest carbon feed rate established during the most recent mercury and dioxins/furans stack test (as specified in 40 CFR 60.1370(a)(1)). Include four items:

(i) Eight-hour average carbon feed rate.

(ii) Reasons for occurrences of low carbon feed rates.

(iii) The corrective actions you have taken to meet the carbon feed rate requirement.

(iv) The calendar date.

(2) Documentation of each quarter when total carbon purchased and delivered to the municipal waste combustion plant is less than the total required quarterly usage of carbon. If you choose to evaluate total carbon purchased and delivered on a municipal waste combustion unit basis, record the total carbon purchased and delivered for each individual municipal waste combustion unit at your plant. Include five items:

(i) Amount of carbon purchased and delivered to the plant.

(ii) Required quarterly usage of carbon.

(iii) Reasons for not meeting the required quarterly usage of carbon.

A. Stack S10: Processes I40 & I41 – Two Consumat dual chambered, stepped hearth, modular starved air municipal waste combustion units with energy recovery, combined combustion capacity of 100 tons per day to be increased to 150 tons per day under 20-BAP-152
Control Device C01 – Acid gas removal system consisting of a lime and powder activated carbon flue gas injection system to be upgraded to a circulating fluid bed scrubber and two cyclones under 20-BAP-152
Control Device C02 – Baghouse

8. New Source Performance Standards (NSPS) for Small Municipal Waste Combustion Units for Which Construction is Commenced After August 30, 1999 or for Which Modification or Reconstruction is Commenced After June 6, 2001. [40 CFR Part 60, Subpart AAAA, as last amended 12/06/2000]

The permit condition numbers in this section of the permit are the associated provision numbers from the relevant standard as they appear in the above referenced Part and Subpart of Title 40 of the Code of Federal Regulations. References to provisions of 40 CFR contained within the permit conditions reference permit conditions with the same number as the referenced provision.

a. Requirements

(iv) The corrective actions you have taken to meet the required quarterly usage of carbon.

(v) The calendar date.

[40 CFR 60.1425(a)(1), (a)(3)-(6), (b)-(c); s. 285.65(13), Wis. Stats.]

(60.1430) *Changing reporting dates*

(a) If the Administrator agrees, you may change the semiannual or annual reporting dates.

(b) See 40 CFR 60.19(c) for procedures to seek approval to change your reporting date.

[40 CFR 60.1430; s. 285.65(13), Wis. Stats.]

(60.1435), (60.1440), (60.1445), (60.1450), (60.1455) *[Intentionally left blank]*

(60.1460) *Equations*

(a) *Concentration correction to 7 percent oxygen.* Correct any pollutant concentration to 7 percent oxygen using equation 1 of this section:
$C_{7\%} = C_{unc} * (13.9) * (1/(20.9-CO_2))$ (Eq.1)
Where:
$C_{7\%}$ = concentration corrected to 7 percent oxygen.
C_{unc} = uncorrected pollutant concentration.
CO_2 = concentration of oxygen (percent).

(b) *Percent reduction in potential mercury emissions.* Calculate the percent reduction in potential mercury emissions ($\%P_{Hg}$) using equation 2 of this section:
$\%P_{Hg} = (E_{i-o}) * (100/E_i)$ (Eq. 2)
Where:
$\%P_{Hg}$ = percent reduction of potential mercury emissions
E_i = mercury emission concentration as measured at the air pollution control device inlet, corrected to 7 percent oxygen, dry basis
E_o = mercury emission concentration as measured at the air pollution control device outlet, corrected to 7 percent oxygen, dry basis

(c) *Percent reduction in potential hydrogen chloride emissions.* Calculate the percent reduction in potential hydrogen chloride emissions ($\%P_{HC1}$) using equation 3 of this section:
$\%P_{HC1} = (E_{i-o}) * (100/E_i)$ (Eq. 3)
Where:
$\%P_{HC1}$ = percent reduction of the potential hydrogen chloride emissions

A. Stack S10: Processes I40 & I41 – Two Consumat dual chambered, stepped hearth, modular starved air municipal waste combustion units with energy recovery, combined combustion capacity of 100 tons per day to be increased to 150 tons per day under 20-BAP-152
Control Device C01 – Acid gas removal system consisting of a lime and powder activated carbon flue gas injection system to be upgraded to a circulating fluid bed scrubber and two cyclones under 20-BAP-152
Control Device C02 – Baghouse

8. New Source Performance Standards (NSPS) for Small Municipal Waste Combustion Units for Which Construction is Commenced After August 30, 1999 or for Which Modification or Reconstruction is Commenced After June 6, 2001. [40 CFR Part 60, Subpart AAAA, as last amended 12/06/2000]

The permit condition numbers in this section of the permit are the associated provision numbers from the relevant standard as they appear in the above referenced Part and Subpart of Title 40 of the Code of Federal Regulations. References to provisions of 40 CFR contained within the permit conditions reference permit conditions with the same number as the referenced provision.

a. Requirements

E_I = hydrogen chloride emission concentration as measured at the air pollution control device inlet, corrected to 7 percent oxygen, dry basis
E_O = hydrogen chloride emission concentration as measured at the air pollution control device outlet, corrected to 7 percent oxygen, dry basis

(d) *Capacity of a municipal waste combustion unit.* Calculate the municipal waste combustion unit capacity based on 24 hours of operation at the maximum charge rate. To determine the maximum charge rate:

(1) *[Intentionally left blank]*

(2) Use the maximum designed charging rate.

(e) *[Intentionally left blank]*

(f) *Quarterly carbon usage.* If you use activated carbon to comply with the dioxins/furans or mercury limits, calculate the required quarterly usage of carbon using equation 4 of this section for plant basis or equation 5 of this section for unit basis:

(1) Plant basis.

$$C = \sum_{i=1}^{n} f_i * h_i \qquad (Eq.\ 4)$$

Where:
C = required quarterly carbon usage for the plant in kilograms (or pounds).
f_i = required carbon feed rate for the municipal waste combustion unit in kilograms (or pounds) per hour. That is the average carbon feed rate during the most recent mercury or dioxins/furans stack tests (whichever has a higher feed rate).
h_i = number of hours the municipal waste combustion unit was in operation during the calendar quarter (hours).
n = number of municipal waste combustion units, i, located at your plant.

(2) Unit basis.

$$C = f * h \qquad (Eq.\ 5)$$

Where:
C = required quarterly carbon usage for the unit in kilograms (or pounds).
f = required carbon feed rate for the municipal waste combustion unit in kilograms (or pounds) per hour. That is the average carbon feed rate during the most recent mercury or dioxins/furans stack tests (whichever has a higher feed rate).
h = number of hours the municipal waste combustion unit was in operation during the calendar quarter (hours).

[40 CFR 60.1460(a)-(c), (d)(2), (f); s. 285.65(13), Wis. Stats.]

A. Stack S10: Processes I40 & I41 – Two Consumat dual chambered, stepped hearth, modular starved air municipal waste combustion units with energy recovery, combined combustion capacity of 100 tons per day to be increased to 150 tons per day under 20-BAP-152
Control Device C01 – Acid gas removal system consisting of a lime and powder activated carbon flue gas injection system to be upgraded to a circulating fluid bed scrubber and two cyclones under 20-BAP-152
Control Device C02 – Baghouse

8. New Source Performance Standards (NSPS) for Small Municipal Waste Combustion Units for Which Construction is Commenced After August 30, 1999 or for Which Modification or Reconstruction is Commenced After June 6, 2001. [40 CFR Part 60, Subpart AAAA, as last amended 12/06/2000]

The permit condition numbers in this section of the permit are the associated provision numbers from the relevant standard as they appear in the above referenced Part and Subpart of Title 40 of the Code of Federal Regulations. References to provisions of 40 CFR contained within the permit conditions reference permit conditions with the same number as the referenced provision.

a. Requirements

(60.1465) *Definitions*

Terms used in 40 CFR part 60, subpart AAAA, and in section I.A.8. of this permit, are defined in 40 CFR 60.1465, in the Clean Air Act, and in subparts A and B of 40 CFR part 60.

[40 CFR 60.1465; s. 285.65(13), Wis. Stats.]

B. Stack S40: Process P40 – Emergency natural gas-fired stationary spark ignition reciprocating internal combustion engine, 400 kW electrical output (536 HP), 4.71 MMBtu/hr heat input, to be constructed under 20-BAP-152		
1. Pollutant: Particulate Matter / PM_{10}		
a. Limitations	**b.** Compliance Demonstration	**c.** Reference Test Methods, Recordkeeping and Monitoring Requirements
(1) The permittee may not cause, allow or permit the emission of particulate matter to the ambient air in excess of 0.15 pounds per million Btu heat input from any stack. [s. NR 415.06(2)(a), Wis. Adm. Code.; 20-BAP-152]	**(1)** The permittee may use only natural gas or propane as fuel in emergency generator P40. [s. 285.65(3), Wis. Stats.; s. NR 407.09(4)(a)1., Wis. Adm. Code; 20-BAP-152]	**(1)** The permittee shall keep and maintain records that indicate the type of fuel used in emergency generator P40. [s. NR 439.04(1)(d), Wis. Adm. Code; 20-BAP-152]

B. Stack S40: Process P40 – Emergency natural gas-fired stationary spark ignition reciprocating internal combustion engine, 400 kW electrical output (536 HP), 4.71 MMBtu/hr heat input, to be constructed under 20-BAP-152		
2. Pollutant: Visible Emissions		
a. Limitations	**b.** Compliance Demonstration	**c.** Reference Test Methods, Recordkeeping and Monitoring Requirements
(1) The permittee may not cause or allow emissions of shade or density greater than number 1 of the Ringlemann chart or 20% opacity, with the exceptions in s. NR 431.05, Wis. Adm. Code. [s. NR 431.05, Wis. Adm. Code; 20-BAP-152]	**(1)** The compliance demonstration methods listed for particulate matter emissions in I.B.1.b.(1) shall also serve as compliance demonstration methods for the visible emissions limitation in I.B.2.a.(1). [s. 285.65(3), Wis. Stats., s. NR 407.09(4)(a)1., Wis. Adm. Code; 20-BAP-152]	**(1)** The recordkeeping and monitoring requirements listed for particulate matter emissions in I.B.1.c.(1) shall also serve as the recordkeeping and monitoring requirements for the visible emissions limitation in I.B.2.a.(1). [s. NR 439.04(1)(d), Wis. Adm. Code; 20-BAP-152]

B. Stack S40: Process P40 – Emergency natural gas-fired stationary spark ignition reciprocating internal combustion engine, 400 kW electrical output (536 HP), 4.71 MMBtu/hr heat input, to be constructed under 20-BAP-152

3. New Source Performance Standards (NSPS): Stationary Spark Ignition Internal Combustion Engines. [40 CFR Part 60, Subpart JJJJ, as last amended 12/04/2020]

The permit condition numbers in this section of the permit are the associated provision numbers from the relevant standard as they appear in the above referenced Part and Subpart of Title 40 of the Code of Federal Regulations. References to provisions of 40 CFR contained within the permit conditions reference permit conditions with the same number as the referenced provision.

a. Requirements

(60.4230) *Applicability*

Process P40 is an emergency spark ignition (SI) internal combustion engine (ICE) with a maximum engine power greater than 19 kW manufactured after January 1, 2009, and is subject to all applicable provisions of 40 CFR part 60, subpart JJJJ.

[40 CFR 60.4230(a)(4)(iv); s. 285.65(13), Wis. Stats.]

(60.4231), (60.4232) *[Intentionally left blank]*

(60.4233) *Emission standards for owners or operators of a stationary SI internal combustion engine*

(a)-(d) *[Intentionally left blank]*

(e) The owner or operator must comply with the emission standards in Table 1 to 40 CFR part 60, subpart JJJJ, for emergency engines with a maximum engine power greater than or equal to 130 HP.

Table 1 to Subpart JJJJ of 40 CFR Part 60—NO_X, CO, and VOC Emission Standards for Stationary Emergency Engines >25 HP

Engine type and fuel	Maximum engine power	Manufacture date	Emission standards [a]					
			g/HP-hr			ppmvd at 15% O_2		
			NO_X	CO	VOC [d]	NO_X	CO	VOC [d]
Emergency	HP≥130	1/1/2009	2.0	4.0	1.0	160	540	86

[a] Owners and operators of stationary non-certified SI engines may choose to comply with the emission standards in units of either g/HP-hr or ppmvd at 15 percent O_2.

[d] For purposes of this subpart, when calculating emissions of volatile organic compounds, emissions of formaldehyde should not be included.

(f)-(h) *[Intentionally left blank]*

[40 CFR 60.4233(e) and Table 1 to subpart JJJJ of 40 CFR part 60; s. 285.65(13), Wis. Stats.]

(60.4234) *Duration of compliance with the emission standards for owners or operators of a stationary SI internal combustion engine*

Owners and operators of stationary SI ICE must operate and maintain stationary SI ICE that achieve the emission standards as required in 40 CFR 60.4233 over the entire life of the engine.

[40 CFR 60.4234; s. 285.65(13), Wis. Stats.]

B. Stack S40: Process P40 – Emergency natural gas-fired stationary spark ignition reciprocating internal combustion engine, 400 kW electrical output (536 HP), 4.71 MMBtu/hr heat input, to be constructed under 20-BAP-152

3. New Source Performance Standards (NSPS): Stationary Spark Ignition Internal Combustion Engines. [40 CFR Part 60, Subpart JJJJ, as last amended 12/04/2020]

The permit condition numbers in this section of the permit are the associated provision numbers from the relevant standard as they appear in the above referenced Part and Subpart of Title 40 of the Code of Federal Regulations. References to provisions of 40 CFR contained within the permit conditions reference permit conditions with the same number as the referenced provision.

a. Requirements

(60.4235), (60.4236) *[Intentionally left blank]*

(60.4237) *Monitoring requirements for owners or operators of an emergency SI internal combustion engine*

(a) If the emergency stationary SI internal combustion engine does not meet the standards applicable to non-emergency engines, the owner or operator must install a non-resettable hour meter.

(b)-(c) *[Intentionally left blank]*

[40 CFR 60.4237(a); s. 285.65(13), Wis. Stats.]

(60.4238), (60.4239), (60.4240), (60.4241), (60.4242) *[Intentionally left blank]*

(60.4243) *Compliance requirements for owners or operators of a stationary SI internal combustion engine*

(a) You must meet the requirement specified in 40 CFR 60.4243(a)(1).

(1) You must operate and maintain the certified stationary SI internal combustion engine and control device according to the manufacturer's emission-related written instructions. You must keep records of conducted maintenance to demonstrate compliance. You must also meet the requirements as specified in 40 CFR part 1068, subparts A through D, as they apply to you. If you adjust engine settings according to and consistent with the manufacturer's instructions, your stationary SI internal combustion engine will not be considered out of compliance.

(2) *[Intentionally left blank]*

(b) You must demonstrate compliance according to the method specified in 40 CFR 60.4243(b)(1).

(1) Purchasing an engine certified according to procedures specified in 40 CFR part 60, subpart JJJJ, for the same model year and demonstrating compliance according to the method specified in 40 CFR 60.4243(a)(1).

(2) *[Intentionally left blank]*

(c) *[Intentionally left blank]*

(d) You must operate the emergency stationary ICE according to the requirements in 40 CFR 60.4243(d)(1) through (3). In order for the engine to be considered an emergency stationary ICE under 40 CFR part 60, subpart JJJJ, any operation other than emergency operation, maintenance and testing, and operation in non-emergency situations for 50 hours per year, as described in 40 CFR 60.4243(d)(1) through (3), is prohibited.

(1) There is no time limit on the use of emergency stationary ICE in emergency situations.

(2) You may operate your emergency stationary ICE for any combination of the purposes specified in 40 CFR 60.4243(d)(2)(i) for a maximum of 100 hours per calendar year. Any operation for non-emergency situations as allowed by 40 CFR 60.4243(d)(3) counts as part of the 100 hours per calendar year allowed by 40 CFR 60.4243(d)(2).

B. Stack S40: Process P40 – Emergency natural gas-fired stationary spark ignition reciprocating internal combustion engine, 400 kW electrical output (536 HP), 4.71 MMBtu/hr heat input, to be constructed under 20-BAP-152

3. New Source Performance Standards (NSPS): Stationary Spark Ignition Internal Combustion Engines. [40 CFR Part 60, Subpart JJJJ, as last amended 12/04/2020]

The permit condition numbers in this section of the permit are the associated provision numbers from the relevant standard as they appear in the above referenced Part and Subpart of Title 40 of the Code of Federal Regulations. References to provisions of 40 CFR contained within the permit conditions reference permit conditions with the same number as the referenced provision.

a. Requirements

(i) Emergency stationary ICE may be operated for maintenance checks and readiness testing, provided that the tests are recommended by federal, state or local government, the manufacturer, the vendor, the regional transmission organization or equivalent balancing authority and transmission operator, or the insurance company associated with the engine. The owner or operator may petition the Administrator for approval of additional hours to be used for maintenance checks and readiness testing, but a petition is not required if the owner or operator maintains records indicating that federal, state, or local standards require maintenance and testing of emergency ICE beyond 100 hours per calendar year.

(ii)-(iii) *[Vacated]* [6]

(3) Emergency stationary ICE may be operated for up to 50 hours per calendar year in non-emergency situations. The 50 hours of operation in non-emergency situations are counted as part of the 100 hours per calendar year for maintenance and testing provided in 40 CFR 60.4243(d)(2). Except as provided in 40 CFR 60.4243(d)(3)(i), the 50 hours per year for non-emergency situations cannot be used for peak shaving or non-emergency demand response, or to generate income for a facility to an electric grid or otherwise supply power as part of a financial arrangement with another entity.

(i) The 50 hours per year for non-emergency situations can be used to supply power as part of a financial arrangement with another entity if all of the following conditions are met:

(A) The engine is dispatched by the local balancing authority or local transmission and distribution system operator;

(B) The dispatch is intended to mitigate local transmission and/or distribution limitations so as to avert potential voltage collapse or line overloads that could lead to the interruption of power supply in a local area or region.

(C) The dispatch follows reliability, emergency operation or similar protocols that follow specific NERC, regional, state, public utility commission or local standards or guidelines.

(D) The power is provided only to the facility itself or to support the local transmission and distribution system.

(E) The owner or operator identifies and records the entity that dispatches the engine and the specific NERC, regional, state, public utility commission or local standards or guidelines that are being followed for dispatching the engine. The local balancing authority or local transmission and distribution system operator may keep these records on behalf of the engine owner or operator.

(ii) *[Reserved in standard]*

(e) Owners and operators of stationary SI natural gas fired engines may operate their engines using propane for a maximum of 100 hours per year as an alternative fuel solely during emergency operations, but must keep records of such use.

(f) *[Intentionally left blank]*

(g) It is expected that air-to-fuel ratio controllers will be used with the operation of three-way catalysts/non-selective catalytic reduction. The AFR controller must be maintained and operated appropriately in order to ensure proper operation of the engine and control device to minimize emissions at all times.

---

[6] On May 1, 2015, the D.C. Courts of Appeals vacated the exemption provisions for emergency demand and voltage stabilization response in the RICE NESHAP and NSPS (*Delaware Dept. of Nat. Resources and Envtl. Control v. EPA*).

B. Stack S40: Process P40 – Emergency natural gas-fired stationary spark ignition reciprocating internal combustion engine, 400 kW electrical output (536 HP), 4.71 MMBtu/hr heat input, to be constructed under 20-BAP-152

3. New Source Performance Standards (NSPS): Stationary Spark Ignition Internal Combustion Engines. [40 CFR Part 60, Subpart JJJJ, as last amended 12/04/2020]

The permit condition numbers in this section of the permit are the associated provision numbers from the relevant standard as they appear in the above referenced Part and Subpart of Title 40 of the Code of Federal Regulations. References to provisions of 40 CFR contained within the permit conditions reference permit conditions with the same number as the referenced provision.

a. Requirements

(h)-(i) *[Intentionally left blank]*

[40 CFR 60.4243(a)(1), (b)(1), (d), (e), (g); s. 285.65(13), Wis. Stats.]

(60.4244) *[Intentionally left blank]*

(60.4245) *Notification, reporting, and recordkeeping requirements for owners or operators of a stationary SI internal combustion engine*

Owners or operators of stationary SI ICE must meet the following notification, reporting and recordkeeping requirements.

(a) Owners and operators of all stationary SI ICE must keep records of the information in 40 CFR 60.4245(a)(1) through (4).

(1) All notifications submitted to comply with 40 CFR part 60, subpart JJJJ, and all documentation supporting any notification.

(2) Maintenance conducted on the engine.

(3) Documentation from the manufacturer that the engine is certified to meet the emission standards and information as required in 40 CFR parts 90, 1048, 1054, and 1060, as applicable.

(4) *[Intentionally left blank]*

(b) For all stationary SI emergency ICE greater than or equal to 500 HP manufactured on or after July 1, 2010, that do not meet the standards applicable to non-emergency engines, the owner or operator of must keep records of the hours of operation of the engine that is recorded through the non-resettable hour meter. The owner or operator must document how many hours are spent for emergency operation, including what classified the operation as emergency and how many hours are spent for non-emergency operation.

(c)-(e) *[Intentionally left blank]*

[40 CFR 60.4245(a)(1)-(3), (b); s. 285.65(13), Wis. Stats.]

(60.4246) *Applicability of General Provisions to 40 CFR part 60, subpart JJJJ*

Table 3 to 40 CFR part 60, subpart JJJJ, shows which parts of the General Provisions in 40 CFR 60.1 through 60.19 apply to you.

[40 CFR 60.4246 and Table 3 to 40 CFR part 60, subpart JJJJ; s. 285.65(13), Wis. Stats.]

(60.4247) *[Intentionally left blank]*

(60.4248) *Definitions applicable to 40 CFR part 60, subpart JJJJ*

Terms used in 40 CFR part 60, subpart JJJJ, and in section I.B.3. of this permit are defined in 40 CFR 60.4248. All terms not defined in 40 CFR 60.4248 shall have the meaning given them in the Clean Air Act and in 40 CFR part 60, subpart A.

[40 CFR 60.4248; s. 285.65(13), Wis. Stats.]

B. Stack S40: Process P40 – Emergency natural gas-fired stationary spark ignition reciprocating internal combustion engine, 400 kW electrical output (536 HP), 4.71 MMBtu/hr heat input, to be constructed under 20-BAP-152

4. National Emission Standard for Hazardous Air Pollutants (NESHAP): Stationary Reciprocating Internal Combustion Engines. [40 CFR Part 63, Subpart ZZZZ, as last amended 12/04/2020]

The permit condition numbers in this section of the permit are the associated provision numbers from the relevant standard as they appear in the above referenced Part and Subpart of Title 40 of the Code of Federal Regulations. References to provisions of 40 CFR contained within the permit conditions reference permit conditions with the same number as the referenced provision.

a. Requirements

(63.6585) *Applicability*

You are subject to 40 CFR part 63, subpart ZZZZ, because you own or operate a stationary reciprocating internal combustion engine (RICE) located at a major source of HAP emissions.

[40 CFR 63.6585(a), (b); s. 285.65(13), Wis. Stats.]

(63.6590) *Affected source*

40 CFR part 63, subpart ZZZZ, applies to each affected source.

(a) Process P40 is a new emergency stationary RICE with a site rating of more than 500 brake HP located at a major source of HAP emissions and is an affected source subject to all applicable requirements in 40 CFR part 63, subpart ZZZZ.

(b) *Stationary RICE subject to limited requirements.* Process P40 does not have to meet the requirements of subpart ZZZZ and of subpart A of 40 CFR part 63 except for the initial notification requirements of 40 CFR 63.6645(f).

(c) *[Intentionally left blank]*

[40 CFR 63.6590(a)(2)(i), (b)(1)(i); s. 285.65(13), Wis. Stats.]

(63.6590), (63.6595), (63.6600)-(63.6605), (63.6610)-(63.6612), (63.6615), (63.6620), (63.6625), (63.6630), (63.6635) *[Intentionally left blank]*

(63.6640) *Compliance requirements*

(a)-(e) *[Intentionally left blank]*

(f) You must operate the emergency stationary RICE according to the requirements in 40 CFR 63.6640(f)(1) through (3). In order for the engine to be considered an emergency stationary RICE under 40 CFR part 63, subpart ZZZZ, any operation other than emergency operation, maintenance and testing, and operation in non-emergency situations for 50 hours per year, as described in 40 CFR 63.6640(f)(1) through (3), is prohibited.

(1) There is no time limit on the use of emergency stationary RICE in emergency situations.

(2) You may operate your emergency stationary RICE for any combination of the purposes specified in 40 CFR 63.6640(f)(2)(i) for a maximum of 100 hours per calendar year. Any operation for non-emergency situations as allowed by 40 CFR 63.6640(f)(3) counts as part of the 100 hours per calendar year allowed by this paragraph (f)(2).

(i) Emergency stationary RICE may be operated for maintenance checks and readiness testing, provided that the tests are recommended by federal, state or local government, the manufacturer, the vendor, the regional transmission organization or equivalent balancing authority and transmission operator, or the insurance company associated with the engine. The owner or operator may petition the Administrator for approval of additional hours to be used for maintenance checks and readiness testing, but a petition is not required if the owner or operator maintains records indicating that federal, state, or local standards require maintenance and testing of emergency RICE beyond 100 hours per calendar year.

B. Stack S40: Process P40 – Emergency natural gas-fired stationary spark ignition reciprocating internal combustion engine, 400 kW electrical output (536 HP), 4.71 MMBtu/hr heat input, to be constructed under 20-BAP-152

4. National Emission Standard for Hazardous Air Pollutants (NESHAP): Stationary Reciprocating Internal Combustion Engines. [40 CFR Part 63, Subpart ZZZZ, as last amended 12/04/2020]

The permit condition numbers in this section of the permit are the associated provision numbers from the relevant standard as they appear in the above referenced Part and Subpart of Title 40 of the Code of Federal Regulations. References to provisions of 40 CFR contained within the permit conditions reference permit conditions with the same number as the referenced provision.

a. Requirements

(ii)-(iii) *[Vacated]* [7]

(3) Emergency stationary RICE located at major sources of HAP may be operated for up to 50 hours per calendar year in non-emergency situations. The 50 hours of operation in non-emergency situations are counted as part of the 100 hours per calendar year for maintenance and testing provided in 40 CFR 63.6640(f)(2). The 50 hours per year for non-emergency situations cannot be used for peak shaving or non-emergency demand response, or to generate income for a facility to supply power to an electric grid or otherwise supply power as part of a financial arrangement with another entity.

(4) *[Intentionally left blank]*

[40 CFR 63.6640(f)(1)-(3); s. 285.65(13), Wis. Stats.]

(63.6645) *Initial notification*

(a)-(e) *[Intentionally left blank]*

(f) In accordance with 40 CFR 63.6590(b), your notification should include the information in 40 CFR 63.9(b)(2)(i) through (v), and a statement that your stationary RICE has no additional requirements and explain the basis of the exclusion (for example, that it operates exclusively as an emergency stationary RICE if it has a site rating of more than 500 brake HP located at a major source of HAP emissions).

(g)-(i) *[Intentionally left blank]*

[40 CFR 63.6645(f); s. 285.65(13), Wis. Stats.]

(63.6650), (63.6655), (63.6660), (63.6665), (63.6670) *[Intentionally left blank]*

(63.6675) *Definitions applicable to 40 CFR part 63, subpart ZZZZ*

Terms used in 40 CFR part 63, subpart ZZZZ, and in section I.B.4. of this permit, are defined in the Clean Air Act, in 40 CFR 63.2, the General Provisions of 40 CFR part 63, and in 40 CFR 63.6675.

[40 CFR 63.6675; s. 285.65(13), Wis. Stats.]

[7] On May 1, 2015, the D.C. Courts of Appeals vacated the exemption provisions for emergency demand and voltage stabilization response in the RICE NESHAP and NSPS (*Delaware Dept. of Nat. Resources and Envtl. Control v. EPA*).

YYY. Construction Permit 20-BAP-152 Requirements	
Condition Type	a. Requirements
1. Construction Authorization	**(1)(a)** The authorization to construct, reconstruct, replace, or modify under construction permit 20-BAP-152 is valid for 42 months after the date of issuance of this permit unless the permit is revoked or suspended. Approval to construct or modify the source shall become invalid 42 months after the date when this construction permit was issued. **(b)** The department may extend the time period to construct, reconstruct, replace or modify for up to 18 additional months for purposes of commencing or completing construction, reconstruction, replacement or modification, on written request upon satisfactory showing that an extension is justified. **(c)** This construction permit authorizes the initial operation of the units covered by the permit to allow testing of the equipment and monitoring of the emissions associated with the equipment. Continued operation of the emissions units after that time is prohibited unless the permittee meets the conditions in I.YYY.4.a. **(d)** The sources covered by this permit are required to meet all emission limits and conditions contained in the permit at all times, including during the initial operation period. **(e)** If construction, reconstruction, replacement, or modification is not completed within the term specified in the permit or any extension granted by the department, the applicant shall apply for a new construction permit. **(f)** Notwithstanding the fact that authorization to construct, reconstruct, replace, or modify a source expires, all conditions in a construction permit are permanent unless the conditions are revised through the revision of the construction permit or through the issuance of a new construction permit. [ss. 285.60(1)(a)2. and 285.66(1), Wis. Stats.; s. NR 406.12, Wis. Adm. Code, 20-BAP-152]
2. Notifications	**(1)** The permittee shall submit written notification of the following dates to the Department within fifteen days of the event: **(a)** The date construction commences on any new or modified emission unit(s) authorized by Permit 20-BAP-152. **(b)** The date the modified control device C01 becomes operational. **(c)** The date(s) the modified emission units I40 and I41 become operational. **(d)** The date the new emission unit P40 becomes operational. **(d)** The notification required under 40 CFR s. 60.7(a)(4), if applicable For purposes of this permit, "operational" shall be defined as the first time of any process related air contaminant is emitted into the ambient air. [s. NR 439.03(1), Wis. Adm. Code, 20-BAP-152] **(2)** Written notifications shall be submitted to the department electronically by uploading through the permittee's Web Access Management System (WAMS) ID when possible. Alternatively, a hard copy of the notifications may be submitted to the Department of Natural Resources West Central Region Headquarters, 1300 W. Clairemont Avenue, Eau Claire, WI 54701 or an alternative address provided by the department. [s. NR 439.03(1), Wis. Adm. Code, 20-BAP-152]

YYY. Construction Permit 20-BAP-152 Requirements	
Condition Type	a. Requirements
3. Completion of Operation Permit Application	**(1)** The permittee shall update the permit application if any changes occur which are not specified or described in the plans and specifications approved under construction permit 20-BAP-152. The updates shall be made within 60 days of the date of the change. [ss. NR 407.05(9) and NR 439.03(1), Wis. Adm. Code, 20-BAP-152]
4. Operation Authorization	**(1)** The emission units authorized in 20-BAP-152 may only operate if both of the following are met: **(a)** The emission units are constructed and/or modified in accordance with the application as approved by the department, and **(b)** The construction and/or modification of the emission units is completed prior to expiration of the authority provided by the construction permit 20-BAP-152 to construct, modify, replace and/or reconstruct these emission units. [ss. NR 406.10, and 406.12, Wis. Adm. Code, and ss. 285.65 and 285.66(1), Wis. Stats., 20-BAP-152] **(2)** The continued operation of the modified and new emission units addressed in this construction permit are prohibited once the authorization to construct expires, unless any required updates have been submitted and the permittee has satisfied the notification requirements of Condition I.YYY.2.[8] [s. 285.62(8), Wis. Stats., 20-BAP-152]
5. Modified/New Emissions Units	**(1)** Modified Emissions Units I40 and I41: The permittee shall operate under the conditions in section(s) I.A.1.-I.A.7. of construction permit 20-BAP-152 until I40 and I41 are modified and operational. Once modified and operational, I40 and I41 shall comply with section(s) I.A.1-I.A.6. and I.A.8. of construction permit 20-BAP-152. The date of transition shall be the date the modified units become operational. [s. 285.65(1) Wis. Stats. 20-BAP-152] **(2)** New Emissions Unit P40: The permittee shall operate any emissions unit(s) constructed under permit 20-BAP-152 in accordance with the applicable conditions of permit 20-BAP-152 starting on the date the new emissions unit(s) becomes operational. For purposes of this permit, "operational" shall be defined as the first time of any process related air contaminant is emitted into the ambient air. [s. 285.65(1), Wis. Stats., 20-BAP-152]
6. Revision and Replacement of Conditions in Construction Permit 13-POY-043	**(1)** Upon issuance of construction permit 20-BAP-152: **(a)** The conditions of permit 20-BAP-152 revise and replace all the conditions of permit 13-POY-043 for all processes. [s. 285.65(3), Wis. Stats.; 20-BAP-152]
7. Compliance Reports/Records	**(1)** The permittee shall submit periodic monitoring reports and certification of compliance as required by the permittee's facility wide operation permit for any modified and/or new emission unit authorized by permit 20-BAP-152 for the period starting when that unit becomes operational. Note that compliance monitoring and reporting requirements and limitations of any unmodified units remain in effect. [s. 285.65(3), Wis. Stats., s. NR 439.03(1)(a), Wis. Stats. 20-BAP-152]

[8] To maintain the operation permit application shield.

YYY. Construction Permit 20-BAP-152 Requirements	
Condition Type	a. Requirements
8. Malfunction Prevention and Abatement Plan	**(1)** The permittee shall update the facility's Malfunction Prevention and Abatement Plan to include new and/or modified emission unit(s) I40, I41, and P40, including any associated control equipment, in accordance with s. NR 439.11, Wis. Adm. Code and Section F. of Part II of this permit, when each unit becomes operational after construction and/or modification. [s. NR 439.11(1), Wis. Adm. Code, 20-BAP-152]
9. Submittals	**(1)** All submittals described in this permit, including permit application updates, notifications and compliance emission test results shall: **(a)** Include the name of the facility, the facility's address, the construction permit number and a description of the affected emission unit(s); **(b)** Be made in writing. [ss. NR 439.03(1) and NR 439.04(1)(d), Wis. Adm. Code, 20-BAP-152] **(2)** Any submittals required in Part I of this permit that specify submittal to the Administrator, US EPA or the permitting authority shall also be submitted to the department. [s. 285.65(3), Wis. Stats., s. NR 439.03(1)(a), Wis. Adm. Code, 20-BAP-152] **(3)** Submittals shall be uploaded through the permittee's Web Access Management System (WAMS) ID. Alternatively, the permittee may submit a hard copy of any submittals to the West Central Region Headquarters, 1300 W. Clairemont Avenue, Eau Claire, WI 54701 or an alternative address provided by the department. [s. 285.65(3), Wis. Stats., s. NR 439.03(1)(a), Wis. Adm. Code, 20-BAP-152]
10. Stack Parameters	**(1)** Each stack for processes constructed and/or modified under permit 20-BAP-152 shall meet the respective requirements identified in Table 1 below. **(a)** The height of each stack above ground level shall be at least the height listed in column (a) of the table below; **(b)** The stacks identified with a "No" in column (b) of the table below may not be equipped with a rainhat or other device which impedes the upward flow of exhaust gas. Stacks with a "Yes" in column (b) of the table below may be equipped with a stack obstruction. **(c)** The stacks identified with a "No" in column (c) of the table below shall exhaust upward (within 10 degrees of vertical). Stacks with a "Yes" in column (c) of the table below may have a non-upward exhaust. [ss. 285.63(1)(b) and 285.65(3), Wis. Stats., 20-BAP-152] **(2)** Compliance Demonstration: The permittee shall keep and maintain on site technical drawings, blueprints or equivalent records of the physical stack parameters. [s. NR 439.04(1)(d), Wis. Adm. Code, 20-BAP-152]

YYY. Construction Permit 20-BAP-152 Requirements	
Condition Type	a. Requirements

Table 1 – Stack Parameter Requirements

	(a)	(b)	(c)
Stack ID	Stack Height (feet)	Obstruction Allowed? (yes/no)	Non-vertical Flow Allowed? (yes/no)
S10	136	No	No

ZZZ. Operating Requirements	
Condition Type	a. Requirements
1. Compliance Reports/Records	**(1)** The permittee shall submit a monitoring report which contains the results of monitoring or a summary of monitoring results required by this permit to the Department of Natural Resources uploaded through the permittee's Web Access Management System (WAMS) ID. Alternatively, the permittee may submit a hard copy of the monitoring report to the West Central Region Headquarters, 1300 W. Clairemont Avenue, Eau Claire, WI 54701 or an alternative address provided by the department. **(a)** The time periods to be addressed by the report are the period from January 1 through June 30 and the period from July 1 through December 31. **(b)** The report shall be submitted to the Department by September 1 for the January 1 to June 30 report and by March 1 for the July 1 to December 31 report. **(c)** All deviations and violations of applicable requirements shall be clearly identified in the report. **(d)** Each submittal shall be certified by a responsible official as to the truth, accuracy and completeness of the report. **(e)** The content of the submittal is described in Part II, Section D of the operation permit and section NR 439.03(1)(b) Wisconsin Administrative Code. [ss. NR 407.09(1)(c)3. and NR 439.03(1)(b), Wis. Adm. Code] **(2)** The permittee shall submit an annual certification of compliance with the requirements of this permit to the Wisconsin Department of Natural Resources uploaded through the permittee's Web Access Management System (WAMS) ID. Alternatively, the permittee may submit a hard copy of the certification of compliance to the West Central Region Headquarters, 1300 W. Clairemont Avenue, Eau Claire, WI 54701 or an alternative address provided by the Department. **(a)** The time period to be addressed by the report is January 1 to December 31 of the preceding year. **(b)** The report shall be submitted to the Wisconsin Department of Natural Resources by March 1 after the reporting period **(c)** The information included in the report shall comply with the requirements of Part II, Section N of this permit. **(d)** Each report shall be certified by a responsible official as to the truth, accuracy and completeness of the report. [ss. NR 407.09(4)(a)3. and NR 439.03(1)(c), Wis. Adm. Code]
2. Compliance Emission Testing	**(1)** Any compliance emission/performance testing required for the emissions unit(s) covered by this permit shall be conducted in accordance with Section U of Part II of this permit and ss. NR 439.06, NR 439.07 and NR 439.075, Wis. Adm. Code, unless otherwise indicated in Part I of this permit. [ss. NR 439.06, NR 439.07, NR 439.075 and NR 484.04, Wis. Adm. Code] **(2)** For compliance emission testing required under ss. 285.11(7), 285.17(2), 285.65(3), 285.65(10), Wis. Stats. and/or ss. NR 407.09(1), NR 407.09(4), NR 439.075(1)(b) or NR 439.075(2)(a) or (c), Wis. Adm. Code, the permit holder may request, in writing, and the department may approve, in writing, an extension of time to conduct a scheduled test or a waiver of a scheduled test in accordance with Section U. of Part II of this permit, unless approval of a waiver or extension by the department is not allowed under an applicable requirement. [ss. NR 407.09(4)(a)1. and NR 439.075(4), Wis. Adm. Code, s. 285.65(3), Wis. Stats.]

ZZZ. Operating Requirements	
Condition Type	a. Requirements
	(3) Test notifications, test plans, test plan modifications and test reports, shall be submitted in accordance with Section U. of Part II of this permit and ss. NR 439.07 and NR 439.075, Wis. Adm. Code, unless otherwise indicated in Part I of this permit. For more details refer to the "Stack Testing Electronic Submittal Guidebook" on the DNR website. [ss. NR 439.07 and NR 439.075, Wis. Adm. Code]
3. Stack Parameters	**(1)** Each stack listed shall meet the respective requirements identified in Table 1 below. **(a)** The height of each stack above ground level shall be at least the height listed in column (a) of the table below; **(b)** The stacks identified with a "No" in column (b) of the table below may not be equipped with a rainhat or other device which impedes the upward flow of exhaust gas. Stacks with a "Yes" in column (b) of the table below may be equipped with a stack obstruction. **(c)** The stacks identified with a "No" in column (c) of the table below shall exhaust upward (within 10 degrees of vertical). Stacks with a "Yes" in column (c) of the table below may have a non-upward exhaust. [ss. 285.63(1)(b) and 285.65(3), Wis. Stats., 20-BAP-152] **(2)** Compliance Demonstration: The permittee shall keep and maintain on site technical drawings, blueprints or equivalent records of the physical stack parameters. [s. NR 439.04(1)(d), Wis. Adm. Code, 20-BAP-152]
4. Submittals	**(1)** Any submittals required in Part I of this permit that specify submittal to the Administrator, US EPA or the permitting authority shall also be submitted to the department. Submittals shall be uploaded through the permittee's Web Access Management System (WAMS) ID. Alternatively, the permittee may submit a hard copy of any submittals to the West Central Region Headquarters, 1300 W. Clairemont Avenue, Eau Claire, WI 54701 or an alternative address provided by the department. [s. 285.65(3), Wis. Stats., ss. NR 407.09(1)(c) and NR 439.03(1)(a), Wis. Adm. Code]

Table 1 – Stack Parameter Requirements

	(a)	(b)	(c)
Stack ID	Stack Height (feet)	Obstruction Allowed? (yes/no)	Non-vertical Flow Allowed? (yes/no)
S10	136	No	No

PART II: General Permit Conditions For Direct Stationary Sources

A. Scope.

This permit is valid only for the structure, building, facility, equipment or operation specifically identified herein. All emissions authorized hereby shall be in compliance with the terms and conditions of all Parts of this permit. [s. 285.60(7), Wis. Stats.]

B. Emissions Prohibited.

Unless the Department has approved an exception under s. NR 436.03(2), Wis. Adm. Code, no person may cause, allow, or permit emissions of any air contaminant into the ambient air in excess of the limits set in chs. NR 400 to 499, Wis. Adm. Code. [s. NR 436.03(1), Wis. Adm. Code]

C. General Emission Limits.

C.1. Applicable to Insignificant Emissions Units.

The following general emission limitations may apply to one or more of the insignificant emission units identified in the preamble of the operation permit. It is the permittee's responsibility to comply with these requirements, if they do apply. Insignificant emission units typically are associated with inconsequential environmental impacts and present little potential for violations of these generally applicable requirements. If there were no observed, documented or known instances of noncompliance, certification of compliance is appropriate. Testing or monitoring to assure compliance is not required by the operation permit.

C.1.a. Section NR 415.05, Wis. Adm. Code - Particulate matter emission limits for processes;

C.1.b. Section NR 415.06, Wis. Adm. Code - Particulate matter emission limits for fuel burning installations;

C.1.c. Section NR 415.07, Wis. Adm. Code - Particulate matter emission limits for incinerators;

C.1.d. Section NR 423.03, Wis. Adm. Code - Solvent metal cleaning;

C.1.e. Section NR 485.05, Wis. Adm. Code - Visible emission limits for motor vehicles, internal combustion engines and mobile sources; and

C.1.f. Section NR 485.055, Wis. Adm. Code - Particulate emission limit for gasoline and diesel internal combustion engines.

C.2. Applicable to Significant and Insignificant Emissions Units.

The following general emission limitations may apply to both significant and insignificant emission units. It is the permittee's responsibility to comply with these requirements, if they apply. Testing or monitoring to assure compliance with these general emission limits is not required by the operation permit.

For each significant emission unit, if a more specific emission limit is included in the permit for any of the pollutants listed below, then compliance with that more specific limit will constitute compliance with the general emission limit.

For insignificant emission units, if there were no observed, documented or known instances of non-compliance, certification of compliance is appropriate.

C.2.a. No person may cause, allow, or permit particulate matter to be emitted into the ambient air which substantially contributes to exceeding of an air standard, or creates air pollution. [s. NR 415.03, Wis. Adm. Code]

C.2.b. No person may cause, allow, or permit any materials to be handled, transported, or stored without taking precautions to prevent particulate matter from becoming airborne. Nor may a person allow a structure, a parking lot, or a road to be used, constructed, altered, repaired, sand blasted or demolished without taking such precautions. Such precautions shall include, but not be limited to the following [s. NR 415.04, Wis. Adm. Code]:

C.2.b.(1) Use, where possible, of water or chemicals for control of dust in the demolition of existing buildings or structures, or construction operations. [s. NR 415.04(1)(a), Wis. Adm. Code]

C.2.b.(2) Application of asphalt, oil, water, suitable chemicals, or plastic covering on dirt roads, material stockpiles, and other surfaces which can create airborne dust, provided such application does not create a hydrocarbon, odor, or water pollution problem. [s. NR 415.04(1)(b), Wis. Adm. Code]

C.2.b.(3) Installation and use of hoods, fans and air cleaning devices to enclose and vent the areas where dusty materials are handled. [s. NR 415.04(1)(c), Wis. Adm. Code]

C.2.b.(4) Covering or securing of materials likely to become airborne while being moved on public roads, railroads, or navigable waters. [s. NR 415.04(1)(d), Wis. Adm. Code]

C.2.b.(5) Conduct of agricultural practices such as tilling of land or application of fertilizers in such manner as not to create air pollution. [s. NR 415.04(1)(e), Wis. Adm. Code]

C.2.b.(6) The paving or maintenance of roadway areas so as not to create air pollution. [s. NR 415.04(1)(f), Wis. Adm. Code]

C.2.c. No person may cause, allow or permit emission of sulfur or sulfur compounds into the ambient air which substantially contribute to the exceeding of an air standard or cause air pollution. [s. NR 417.03, Wis. Adm. Code]

C.2.d. No person may cause, allow or permit organic compound emissions into the ambient air which substantially contribute to the exceeding of an air standard or cause air pollution. No person may cause, allow or permit organic compounds to be used or handled without using good operating practices and taking reasonable precautions to prevent the spillage, escape or emission of organic compounds, solvents or mixtures. [s. NR 419.03, Wis. Adm. Code]

C.2.e. No person may cause, allow or permit the disposal of more than 5.7 liters (1.5 gallons) of any liquid Volatile Organic Compound (VOC) waste, or of any liquid, semisolid or solid waste materials containing more than 5.7 liters (1.5 gallons) of any VOC, in any one day from a facility in a manner that would permit their evaporation into the ambient air during the ozone season. This includes, but is not limited to, the disposal of VOC which must be removed from VOC control devices so as to maintain the control devices at their required operating efficiency. Disposal during the ozone season shall be by methods approved by the Department, such as

incineration, recovery for reuse, or transfer in closed containers to an acceptable disposal facility, such that the quantity of VOC which evaporates into the ambient air does not exceed 15% (by weight) or 5.7 liters (1.5 gallons) in any one day, whichever is larger. [s. NR 419.04, Wis. Adm. Code]

C.2.f. No person may cause, allow or permit emissions of carbon monoxide to the ambient air which substantially contribute to the exceeding of an air standard or cause air pollution. [s. NR 426.03, Wis. Adm. Code].

C.2.g. No person may cause, allow or permit emissions into the ambient air of lead or lead compounds which substantially contribute to the exceeding of an air standard or air increment, or which create air pollution. [s. NR 427.025, Wis. Adm. Code]

C.2.h. No person may cause, allow, or permit nitrogen oxides or nitrogen compounds to be emitted to the ambient air which substantially contribute to the exceeding of an air standard or cause air pollution. [s. NR 428.03, Wis. Adm. Code]

C.2.i. No person may cause, allow or permit emission into the ambient air of any substance or combination of substances in such quantities that an objectionable odor is determined to result unless preventive measures satisfactory to the Department are taken to abate or control such emission. [s. NR 429.03(1), Wis. Adm. Code *]

C.2.j. Open burning is prohibited except as provided in s. NR 429.04, Wis. Adm. Code. [s. NR 429.04, Wis. Adm. Code *]

C.2.k. [Note: Under the Wisconsin Recycling Law (Wisconsin Act 335), small businesses, commercial enterprises, and industries may not use burn barrels or engage in other kinds of open burning and may not be granted burning permits by municipalities. However, the prohibition on burn barrels does not apply to small businesses in which the owners reside at the same location and cannot separate their business waste from their household waste.]

C.2.l. No person may cause, allow or permit emissions into the ambient air from any direct or portable source in excess of one of the visible emission limits specified in ch. NR 431, Wis. Adm. Code. Where the presence of uncombined water is the only reason for failure to meet the requirements of ch. NR 431, Wis. Adm. Code, such failure is not a violation of the chapter. [s. NR 431.03, Wis. Adm. Code]

C.2.m. When the Department requires instrumentation to monitor the operation of air pollution control equipment, or to monitor source performance, the instrument shall measure operational variables with the following minimum accuracy: [ss. NR 439.055(3), Wis. Adm. Code]

C.2.n. The temperature monitoring device shall have an accuracy of 0.5% of the temperature being measured in degrees Fahrenheit or ±5ºF of the temperature being measured, or the equivalent in degrees Celsius (centigrade), whichever is greater. [s. NR 439.055(3)(a), Wis. Adm. Code]

C.2.o. The pressure drop monitoring device shall be accurate to within 5% of the pressure drop being measured or within ±1 inch of water column, whichever is greater. [s. NR 439.055(3)(b), Wis. Adm. Code]

C.2.p. The current, voltage, flow or pH monitoring device shall be accurate to within 5% of the specific variable being measured.

C.2.q. At a minimum, all instruments used for measuring source or air pollution control equipment operational variables shall be calibrated yearly or at a frequency based on good engineering practice as established by operational history, whichever is more frequent. [ss. NR 439.055(4), Wis. Adm. Code]

C.2.r. No person may cause, allow, or permit emissions into the ambient air of any hazardous substance in such quantity, concentration, or duration as to be injurious to human health, plant or animal life unless the purpose of that emission is for the control of plant or animal life. Hazardous substances include, but are not limited to, hazardous air contaminants listed in Tables A to C of s. NR 445.07, Wis. Adm. Code. [s. NR 445.03, Wis. Adm. Code *]

C.2.s. Chapter NR 447, Wis. Adm. Code, applies to all air contaminant sources which may emit asbestos, to their owners and operators and to any person whose action causes the emission of asbestos to the ambient air, including demolition and renovation activities. Chapter NR 447, Wis. Adm. Code, establishes emission limitations for asbestos air contaminant sources, establishes procedures to be followed when working with asbestos materials and contains additional reporting and record keeping requirements for owners or operators of asbestos air contaminant sources in order to protect air quality. [ch. NR 447, Wis. Adm. Code]

C.2.t. Owners and operators of a stationary source that manufactures, uses, stores, or otherwise handles more than a threshold quantity of a listed regulated substance, as determined under 40 CFR 68.115, must implement the Accidental Release Prevention Requirements of 40 CFR Part 68, no later than the latest of the following dates:

C.2.t.(1) June 21, 1999;

C.2.t.(2) Three years after the date on which a regulated substance is first listed under 40 CFR 68.130; or

C.2.t.(3) The date on which a regulated substance is first present above a threshold quantity in a process.

[40 CFR Part 68.10, s. 285.65(13), Wis. Stats.]

C.2.u. No person may cause, allow or permit emissions of mercury in such quantity and duration as to cause the ambient air concentration to exceed 1 mg/m^3, averaged over a 30-day period. [s. NR 446.03(1), Wis. Adm. Code]

D. Reporting Requirements.

D.1. The Department shall be notified of the events in Table D1.:

Table D1.

Event	Timing
D.1.a. Hazardous substance air spill.	Immediate call: 1-800-943-0003
D.1.b. Malfunction or other unscheduled event which causes or may cause any emission limitation to be	Notification by next business day of any such event at the source which is not reported in advance to the Department.

Table D1.

Event	Timing
exceeded (except certain visible emissions limit exceedances detected by a continuous emission monitor, see s. NR 439.03(4)(a)2., Wis. Adm. Code.).	Report the cause and duration of the exceedance, the period of time considered necessary for correction, and measures taken to minimize emissions during the period or will be taken to prevent future deviations.
D.1.c. Deviation from any other condition specified in this permit.	Notification by next business day identifying the deviation, cause, duration and steps taken to prevent recurrence.

[ss. 285.65(10) and 292.11(2), Wis. Stats., and s. NR 439.03(4) and NR 445.16, Wis. Adm. Code]

D.2. Persons possessing or controlling a hazardous substance shall immediately notify the Department of any hazardous emission not in conformity with a permit or allowed by the Department under chs. NR 400 to 499, Wis. Adm. Code. Notice shall be given as required by s. 292.11, Stats., and ch.706, Wis. Adm. Code.

D.3. The permittee shall report to the Department, in advance, schedules for planned shutdown and startup of air pollution control equipment and the measures to be taken to minimize the down time of the control equipment while the source is operating. Scheduled maintenance or any other scheduled event, including startup, shutdown or soot blowing procedures which have been approved by the Department under s. NR 436.03(2)(b), Wis. Adm. Code which causes an emission limit to be exceeded shall also be reported in advance to the Department. Advance reporting pursuant to this permit condition does not relieve any person from the duty to comply with any applicable emission limitations. Emissions in excess of the limits set in chs. NR 400-499, Wis. Adm. Code, may be allowed when the emissions are temporary and due to scheduled maintenance, startup or shutdown of operations carried out in accord with a plan and schedule approved by the Department. [s. NR 436.03(2)(b) and NR 439.03(6), Wis. Adm. Code]

D.4. The permittee shall furnish to the Department, within a reasonable time specified by the Department, any information that the Department may request in writing to determine whether cause exists to revise, revoke or suspend the operation permit or to determine compliance with this permit. Upon request, the permittee shall also furnish to the Department copies of records required to be kept pursuant to this permit. [s. NR 407.09(1)(f)5., Wis. Adm. Code]

D.5. The permittee shall submit the results of monitoring required by the permit to the Department according to the schedule established in the permit. Any such report shall clearly identify all instances of deviations from permit requirements. All such reports shall be signed by the responsible official for the source. [s. 285.17(2), Wis. Stats., and s. NR 439.03(1)(b), Wis. Adm. Code]

D.6. Each permit reporting required under s. NR 439.03, Wis. Adm. Code, shall be certified by a responsible official as to its truth, accuracy and completeness. This certification and any other certification required under ch. NR 439, Wis. Adm. Code shall state that, based on information and belief formed after reasonable inquiry, the statements and information in the document are true, accurate and complete. [s. NR 439.03(10), Wis. Adm. Code]

D.7. Except for information determined to be confidential under s. 285.70(2), Wis. Stats., or s. NR 2.19, Wis. Adm. Code, any information or reports obtained by the Department in the administration of ss. 285.01 to 285.87 and 299.15, Wis. Stats., will be available for public inspection at the offices of the Department. [s. 285.70(1), Wis. Stats., s. NR 2.19, Wis. Adm. Code]

D.8. All certifications made under s. NR 439.03, Wis. Adm. Code, and all material statements and representations made in any report or notice required by the operation permit shall be truthful. [s. NR 439.03(11), Wis. Adm. Code]

D.9. Any document required under the operation permit and submitted to the Department, including reports, shall contain a certification by a responsible official that meets the requirements of s. NR 407.05(4)(j), Wis. Adm. Code. [s. NR 407.09(4)(a)1., Wis. Adm. Code]

D.10. Copies of all records and reports required under this permit shall be retained by the permittee for a period of 5 years except for records required to be maintained or reports required to be submitted under ss. NR 405.16(3) or NR 408.10(5), Wis. Adm. Code. Records and reports required under s. NR 405.16(3) or NR 408.10(5), Wis. Adm. Code, shall be maintained for a minimum of 10 years. [s. NR 439.04(2), Wis. Adm. Code]

E. Right of Entry and Inspection.

The permittee shall allow authorized representatives of the Department to enter upon the permittee's premises, to have access to and examine any record relating to emissions or required to be kept, and to make any inspection necessary to ascertain compliance with air pollution control laws and the terms of this permit. The Department may, for the purpose of determining a source's compliance with applicable requirements, sample or monitor at reasonable times production materials or other substances or operational parameters. [ss. 285.13 and 285.19, Wis. Stats., and s. NR 439.05, Wis. Adm. Code]

F. Malfunction Prevention and Abatement Plans.

The owner or operator of any direct or portable source which may emit hazardous substances or emits more than 15 pounds in any day or 3 pounds in any hour of any air contaminant for which emission limits have been adopted shall prepare a written malfunction prevention and abatement plan to prevent, detect, and correct malfunctions or equipment failures which may cause any applicable emission limitation to be violated or which may cause air pollution. Any such plan shall be carried out by the owner or operator. The plan shall be updated at least every 5 years and shall include the items listed in s. NR 439.11(1), Wis. Adm. Code. The Department may require the plan to be submitted for review and approval. All air pollution control equipment shall be operated and maintained in conformance with good engineering practices to minimize the possibility for the exceedance of any emissions limitations. [s. NR 439.11, Wis. Adm. Code]

Note: For this condition, 'source' refers to an individual emissions unit.

G. Emission Control Action Plan.

Any person responsible for the operation of a direct source which emits 0.25 tons or more per day of any air contaminant for which air standards have been adopted, the permittee shall prepare an emission control action program, consistent with good industrial practice and safe operating procedures, for reducing the emission of air contaminants into the outdoor atmosphere during periods of an air pollution alert, air pollution warning or air pollution emergency declared under s. NR 493.03(2), Wis. Adm. Code. The emission control action program shall be designed to reduce or eliminate emissions of air contaminants into the outdoor atmosphere in accordance with the requirements set forth in Tables 2 to 6 of ch. NR 493, Wis. Adm. Code. [s. NR 493.04, Wis. Adm. Code]

Note: For this condition, 'direct source' refers to an entire facility.

H. Change in Ownership or Control.

In the event of a change in ownership or operational control of a source, the permittee shall notify the Department in writing. The notification should include a written agreement between the current and new owner or operator which sets forth a specific date for transfer of permit responsibility, coverage and liability. [s. 285.60(2)(a), Wis. Stats., and s. NR 407.11(1)(d), Wis. Adm. Code.]

I. Permit Flexibility, Revision, Suspension, and Revocation.

I.1. Changes to the source which are not modifications and changes in permit content are regulated under the permit flexibility provisions of s. 285.60(4), Wis. Stats., and s. NR 407.025, Wis. Adm. Code, and the operation permit revision provisions in ss. NR 407.11, NR 407.12, NR 407.13, NR 407.14, and NR 407.16, Wis. Adm. Code.

I.2. An operation permit may be suspended or revoked, in whole or in part, for cause. [ss. NR 407.09(1)(f)3. and NR 407.15, Wis. Adm. Code.]

I.3. A construction permit may be suspended, revoked or revised, in whole or in part, for cause. [s. NR 406.11, Wis. Adm. Code]

J. Construction, Reconstruction, Replacement, Relocation or Modification.

J.1. Unless the replacement is authorized by a construction permit or is exempt under s. NR 406.04, Wis. Adm. Code, replacement of the source(s) covered by this permit is prohibited. [s. 285.60(1)(a), Wis. Stats.]

J.2. No person may commence construction, reconstruction, replacement, relocation or modification of a stationary source unless the person has a construction permit for the source or unless the source is exempt from the requirement to obtain a permit under s. 285.60(5), Wis. Stats., or under ch. NR 406, Wis. Adm. Code. Applications for the construction permit shall be submitted on forms which are available from the Department at its Madison headquarters, Department Regional Headquarters and Service Center Offices or online. [s. 285.60(1)(a), Wis. Stats., NR 406.03(1m)(a), Wis. Adm. Code]

Note: The address of the Madison headquarters is: Wisconsin Department of Natural Resources, Bureau of Air Management, PO Box 7921, Madison, WI 53707-7921, Attention: Construction permits. The internet web address is: http://dnr.wi.gov/topic/AirPermits/Forms.html.

J.3. For new or modified sources for which no construction permit is required, the application for an operation permit shall be filed before the source commences construction or modification. [s. NR 407.04(1)(b), Wis. Adm. Code]

K. Circumvention.

K.1. The installation or use of any article, machine, equipment, process, or method which conceals an emission which would otherwise constitute a violation of an applicable rule is prohibited unless written approval has been obtained from the Department. Such concealment includes, but is not limited to, the use of gaseous diluents to achieve compliance and the unnecessary separation of an operation into parts to avoid coverage by a rule that applies only to operations larger than a specified size. [s. NR 439.10, Wis. Adm. Code]

K.2. No one may render inaccurate any monitoring device or method required under ch. NR 439, Wis. Adm. Code, or in this permit. [s. NR 439.03(12), Wis. Adm. Code]

K.3. No person may knowingly falsify, tamper with, render inaccurate or fail to install any monitoring device or method required to be maintained or followed under the Clean Air Act. [Clean Air Act s. 113(c)(2)(C); 42 USC 7413(c)(2)(C), s. 285.65(13), Wis. Stats.]

L. Civil/Criminal Liability.

L.1. Any owner or operator who fails to construct a stationary source in accordance with the application as approved by the Department; any owner or operator who fails to construct and operate a stationary source in accordance with conditions imposed by the Department under s. 285.65, Wis. Stats.; any owner or operator who modifies a stationary source in violation of conditions imposed by the Department under s. 285.65, Wis. Stats.; or any owner or operator who commences construction or modification of a stationary source without applying for and receiving a permit as required under chapters NR 405, NR 406 or NR 408, Wis. Adm. Code, shall be considered in violation of s. 285.60, Wis. Stats. [s. NR 406.10, Wis. Adm. Code]

L.2. Nothing in the operation permit shall be construed to relieve the permit holder from civil and/or criminal penalties under ss. 285.87 and 299.15, Wis. Stats., for violation of the terms or conditions of this permit, or for violation of ss. 285.01 to 285.87, 292.11(2) and 299.15, Wis. Stats., or of any rule or any special order issued under those sections except where the operation permit shield provisions of s. 285.62(10)(b), Wis. Stats., are applicable. [s. 285.62(10)(b), Wis. Stats.]

L.3. The permittee has the duty to comply with all applicable conditions in chs. NR 400-499, air quality standards of ch. NR 404, control strategies of all local, state and federal regulations which are part of the state implementation plan and applicable limits in the permit. [s. NR 406.13, Wis. Adm. Code, s. 285.60(7), Wis. Stats., s. 285.65(13), Wis. Stats.]

L.4. Any noncompliance with this permit constitutes a violation of the Wisconsin statutes, the federal clean air act, or both, and is grounds for enforcement action; for permit suspension, revocation or revision; or, if allowed under s. 285.62(6), Wis. Stats., for denial of an operation permit renewal application. [s.NR 407.14, NR 407.15, and NR 407.09(1)(f)1., Wis. Adm. Code, s. 285.60(7), Wis. Stats. and 42 USC 7661a, s. 285.65(13), Wis. Stats.]

L.5. The following items are provided per s. NR 407.09(1)(d) and (f), Wis. Adm. Code:

L.5.a. It is not a defense for a permittee in an enforcement action that it would have been necessary to halt or reduce the permitted activity in order to maintain compliance with this permit. [s. NR 407.09(1)(f)2., Wis. Adm. Code]

L.5.b. The filing of a request by the permittee for a permit revision or revocation, or the filing of a notification of planned changes under s. NR 407.025, Wis. Adm. Code, or of anticipated noncompliance, does not stay any permit condition. [s. NR 407.09(1)(f)3., Wis. Adm. Code]

L.5.c. The issuance of this permit does not convey any property rights of any sort, or any exclusive privilege, nor does it authorize any injury to private property or any invasion of personal rights. [s. NR 407.09(1)(f)4., Wis. Adm. Code]

L.5.d. The provisions of this permit are severable. In the event of a successful challenge to any portion of the permit, all other portions of the permit remain valid and effective. [s. NR 407.09(1)(d), Wis. Adm. Code]

M. Recordkeeping Requirements.

M.1. The permittee shall maintain the following records, per s. NR 439.04(1), Wis. Adm. Code:

M.1.a. Records of all sampling, testing and monitoring conducted or required under chs. NR 400 to 499, Wis. Adm. Code, or under this permit. Records of sampling, testing or monitoring shall include the following [s. NR 439.04(1)(a), Wis. Adm. Code]:

M.1.a.(1) The date, monitoring site and time and duration of sampling, testing, monitoring or measurements. [s. NR 439.04(1)(a)(1), Wis. Adm. Code]

M.1.a.(2) The dates the analyses were performed. [s. NR 439.04(1)(a)(2), Wis. Adm. Code]

M.1.a.(3) The company or entity that performed the analysis. [s. NR 439.04(1)(a)(3), Wis. Adm. Code]

M.1.a.(4) The analytical techniques or methods used, including supporting information such as calibration and maintenance records of all original recording charts for continuous monitoring instrumentation including emissions or equipment monitors. [s. NR 439.04(1)(a)(4), Wis. Adm. Code]

M.1.a.(5) The results of the analyses. [s. NR 439.04(1)(a)(5), Wis. Adm. Code]

M.1.a.(6) The relevant operating conditions that existed at the time of sampling, testing, monitoring or measurement. [s. NR 439.04(1)(a)(6), Wis. Adm. Code]

M.1.b. Records detailing all malfunctions which cause any applicable emission limitation to be exceeded, including logs to document the implementation of the plan required under s. NR 439.11, Wis. Adm. Code. [s. NR 439.04(1)(b), Wis. Adm. Code];

M.1.c. Records detailing all activities specified in any compliance schedule approved by the Department under chs. NR 400 to 499, Wis. Adm. Code. [s. NR 439.04(1)(c), Wis. Adm. Code]; and

M.1.d. Any other records relating to the emission of air contaminants which may be requested in writing by the Department. [s. NR 439.04(1)(d), Wis. Adm. Code];

M.2. The owner or operator of a source constructed or last modified prior to July 1, 2004, with non-exempt, potential to emit emissions of a hazardous air contaminant less than or equal to the applicable threshold in column (c), (d), (e), or (f) of Table A, B or C of s. NR 445.07, Wis. Adm. Code, shall maintain records in accordance with s. NR 439.04(1) and (2), Wis. Adm. Code, starting no later than June 30, 2007. [s. NR 445.08(6)(b), Wis. Adm. Code *]

M.2.a. In addition to meeting the recordkeeping requirements of s. NR 439.04(1) and (2), Wis. Adm. Code, an owner or operator of any compression ignition internal combustion engine for which s. NR 445.09, Wis. Adm. Code applies shall: [s. NR 445.09(6), Wis. Adm. Code]

M.2.a.(1) Keep records of maintenance performed on any particulate matter emission control device used to comply with s. NR 445.09(3), Wis. Adm. Code. [s. NR 445.09(6)(a), Wis. Adm. Code]

M.2.a.(2) For any engine that stays or that is intended to stay in a single location for any 12 consecutive month period, keep the following records; [s. NR 445.09(6)(b), Wis. Adm. Code]:

M.2.a.(2)1. The amount fuel oil combusted on a monthly basis for any engine not using a certified control device. [s. NR 445.09(6)(b)1., Wis. Adm. Code]

M.2.a.(2)2. The power rating and days of operation of any CI engine used to substitute power under s. NR 445.09(1)(d), Wis. Adm. Code. [s. NR 445.09(6)(b)2., Wis. Adm. Code]; and

M.2.a.(2)3. The cost of rebuilding any CI engine on a monthly basis. [s. NR 445.09(6)3., Wis. Adm. Code]

M.3. Owners and operators of facilities required to file emission inventory reports shall keep accurate and reliable records sufficient to enable verification of the reports by the Department. [s. NR 438.03(4), Wis. Adm. Code]

M.4. Copies of all records and reports required under this permit shall be retained by the permittee for a period of 5 years or for such other period as may be specified by the Department. [s. NR 439.04(2), Wis. Adm. Code]

M.5. Source obligation for Prevention of Significant Deterioration includes project records demonstrating the calculated difference between projected actual emissions and baseline actual emissions does not exceed the level that is considered significant for the air contaminant. Before beginning actual construction of a project, the owner or operator shall meet the record requirements and make available those records for the Department or general public upon request. [s. NR 405.16(3) and (4), Wis. Adm. Code]

M.6. Source obligation for Major Source Nonattainment Area Construction Permits includes project records demonstrating the calculated difference between projected actual emissions and baseline actual emissions does not exceed the level that is considered significant for the air contaminant. Before beginning actual construction of a project, the owner or operator shall meet the record requirements and make available those records for the Department or general public upon request. [s. NR 408.10(5) and (6), Wis. Adm. Code]

M.7. Except for information determined to be confidential under s. 285.70(2), Wis. Stats. or s. NR 2.19, Wis. Adm. Code, any information or reports obtained by the Department in the administration of ss. 285.01 to 285.87 and 299.15, Wis. Stats.,

will be available for public inspection at the offices of the Department. [s. 285.70(1), Wis. Stats., s. 2.19, Wis. Adm. Code]

N. Compliance Certification.

N.1. The permittee shall submit operation compliance certifications to the Department. [s. NR 439.03 (1)(c) and (9), Wis. Adm. Code]

N.2. The certification shall be submitted according to the schedule established in the operation permit. [s. NR 439.03(1)(c), Wis. Adm. Code]

N.3. The certification shall include the following information: [s. NR 439.03(8), Wis. Adm. Code]:

N.3.a. Identification of each permit term or condition that is the basis of the certification. [s. NR 439.04(8)(a), Wis. Adm. Code];

N.3.b. The compliance status of the source with respect to each term or condition identified in N.3.a. [s. NR 439.04(8)(b), Wis. Adm. Code];

N.3.c. Information on whether compliance was continuous or intermittent. [s. NR 439.04(8)(c), Wis. Adm. Code];

N.3.d. The method(s) used for determining the compliance status, currently and over the previous 12 month period. [s. NR 439.04(8)(d), Wis. Adm. Code];

N.3.e. Compliance status with respect to 40 CFR 68 (Accidental Release Prevention) including registration and submission of the risk management plan, as specified in 40 CFR 68.160 and 68.150, respectively, if applicable; and

N.3.f. Other information the Department may require, as specified in the operation permit, to determine the compliance status of the source. [s. NR 439.03(8)(e), Wis. Adm. Code]

O. Required Air Emission Inventory Reports.

The permittee shall annually submit to the Department an emission inventory report of annual, actual emissions or throughput information in accordance with ch. NR 438, Wis. Adm. Code. [s. NR 438.03, Wis. Adm. Code]

P. Annual Emission Fees.

The permittee shall pay an annual fee to the Department at the rate specified in s. 285.69(2), (2e) and (2m), Wis. Stats. [s. NR 410.04, Wis. Adm. Code]

Q. General Provisions for National Emission Standards for Hazardous Air Pollutants (NESHAP) and New Source Performance Standard (NSPS).

Q.1. The general provisions in 40 CFR Part 63, Subpart A apply to any permittee that is affected or becomes affected by a standard promulgated by EPA under section 112 of the act (42 USC 7412), as explicitly stated in the relevant 40 CFR Part 63 standard. The general provisions in 40 CFR Part 63, Subpart A do not apply to regulations promulgated by EPA under section 112(r) of the act, unless otherwise specified in those regulations. [s. 285.65(13), Wis. Stats., 40 CFR s. 63.1(a)(4)]

Q.2. The general provisions in 40 CFR Part 60, Subpart A apply to any permittee that is affected or becomes affected by a standard promulgated by EPA under section 111 of the act (42 USC 7411). [s. 285.65(13), Wis. Stats., 40 CFR ss. 60.1(a) and (b)]

R. Stratospheric Ozone Protection.

R.1. State Requirements. (Call 1-608-264-6049 for information)

R.1.a. During the salvaging, dismantling or transporting of refrigeration equipment, no person may knowingly or negligently release ozone-depleting refrigerant to the environment, except for minimal releases that occur as a result of efforts to transfer ozone depleting refrigerant into storage tanks. [s. NR 488.03(1), Wis. Adm. Code *]

R.1.b. No person may knowingly or negligently release from a storage tank to the environment ozone-depleting refrigerant that was removed during the salvaging, dismantling or transporting of refrigeration equipment, except for minimal releases that occur as a result of efforts to transfer ozone-depleting refrigerant into refrigeration equipment or other storage tanks. [s. NR 488.03(2), Wis. Adm. Code *]

R.1.c. No person may salvage or dismantle any refrigeration equipment unless [s. NR 488.03(3), Wis. Adm. Code]:

R.1.c.(1) That person holds and prominently displays an annual registration of certification obtained from the Department under s. NR 488.04, Wis. Adm. Code. [s. NR 488.03(3)(a), Wis. Adm. Code *];

R.1.c.(2) That person uses refrigerant recovery equipment approved by the Department under s. NR 488.07, Wis. Adm. Code, to transfer remaining ozone-depleting refrigerant from each piece of refrigeration equipment into storage tanks[s. NR 488.03(3)(b), Wis. Adm. Code]; and

R.1.c.(3) Individuals who use the approved refrigerant recovery equipment have, or are working under the direct supervision of individuals who have, the qualifications required under s. NR 488.08, Wis. Adm. Code. [s. NR 488.03(3)(c), Wis. Adm. Code *]

R.1.d. Any person who sells, gives or transports refrigeration equipment to a scrap metal processor shall do the following: [s. NR 488.05(1), Wis. Adm. Code *]

R.1.d.(1) Transfer ozone-depleting refrigerant from the refrigeration equipment into a storage tank using approved refrigerant recovery equipment or obtain and possess documentation that another person performed the transfer. [s. NR 488.05(1)(a), Wis. Adm. Code*]; and

R.1.d.(2) Provide documentation to the scrap metal processor that he or she has complied with R.1.d.(1). [s. NR 488.05(1)b), Wis. Adm. Code *]

Note: Sample forms for the documentation of compliance with R.1.d.(1) are available from the Bureau of Air Management CFC Program.

Exemption: R.1.d does not apply to a person who sells, gives or transports refrigeration equipment to a scrap metal processor when that processor has agreed in writing to transfer the ozone-depleting refrigerant into a storage tank using approved refrigerant recovery equipment and that the processor is registered with the Department under s. NR 488.04, Wis. Adm. Code. [s. NR 488.05, Wis. Adm. Code*]

R.1.e. Any person who transports, for the purposes of salvaging or dismantling, refrigeration equipment that contains ozone depleting refrigerant shall certify to the Department that person will not knowingly or negligently release ozone-depleting refrigerant to the environment, except for minimal releases that occur as a result of refrigerant recovery efforts. This certification shall be submitted annually, along with a description of the safe transport methods to be used, and the

fees required under s. NR 488.11, Wis. Adm. Code. [s. NR 488.10(1), Wis. Adm. Code *]

S. Payment of Construction Permit Fees.

Any person who obtains a construction permit shall pay the application fee within thirty days of the date of the billing statement. [s. NR 410.03(4), Wis. Adm. Code]

T. Credible Evidence.

Notwithstanding the compliance determination methods which the owner or operator of a source is authorized to use under this permit, any relevant information or appropriate method may be used to determine a source's compliance with applicable emission limitations. [s. NR 439.06, Wis. Adm. Code, 42 USC 7413(e), s. 285.65(13), Wis. Stats.]

U. Compliance Testing Requirements.

U.1. Unless the Department requires or approves the performance of a test at less than capacity, all compliance emission tests shall be performed with the equipment operating at capacity or as close to capacity as practicable. [s. NR 439.07(1), Wis. Adm. Code]

U.2. The owner or operator of the source tested shall submit 2 copies of the emission test report to the Department within 60 days after completion of a compliance emission test. If samples were collected by the department, the test report shall be submitted within 30 days after the results from the test samples have been reported to the source owner or operator by the department. If requested, the department may grant an extension of up to 30 days for test report submittal. The emission test report shall include, but need not be limited to the information listed in s. NR 439.07(9)(a)-(m), Wis. Adm. Code. The emission test report shall be submitted to the Department of Natural Resources electronically by uploading through the permittee's Web Access management System (WAMS) ID. Alternatively, the emission test report may be submitted to the address specified in Part I of this permit or an alternative address provided by the facility's assigned compliance inspector.. [s. NR 439.07(9), Wis. Adm. Code]

U.3. Unless more advance notice is required by an applicable requirement, the Department shall be notified in writing at least 20 business days in advance of a compliance emission test, including initial certification tests and relative accuracy tests performed under s. NR 439.09, Wis. Adm. Code, to provide the Department an opportunity to have a representative present to witness the testing procedures. The notice shall provide a test plan which includes, but need not be limited to, the information listed in s. NR 439.07(2)(a)-(f), Wis. Adm. Code. The notification and test plan shall be submitted to the Wisconsin Department of Natural Resources electronically by uploading through the permittee's Web Access management System (WAMS) ID. Alternatively, the notification and test plan may be submitted to the address specified in Part I of this permit or an alternative address provided by the facility's assigned compliance inspector. The source owner or operator shall notify the department of any modification to the test plan at least 5 business days prior to the test. In the event the owner or operator is unable to conduct the compliance emission test on the date specified in the test plan, due to unforeseeable circumstances beyond the owner or operator's control, the owner or operator shall notify the department at least 5 business days prior to the scheduled compliance emission test date and specify the date when the test is rescheduled. [ss. NR 439.07(2) and (4), Wis. Adm. Code]

U.4. The following exceptions apply to testing required by this permit under ss. 285.11(7), 285.17(2), 285.65(3), 285.65(10), Wis. Stats. and/or ss. NR 407.09(1), NR 407.09(4), NR 439.075(1)(b) or NR 439.075(2)(a) or (c), Wis. Adm. Code:

U.4.a. The department may grant a waiver of a scheduled test if any of the following applies:

U.4.a.(1) The direct stationary source associated with the emission point subject to the testing requirement will be ceasing operation within one year of a scheduled test.

U.4.a.(2) The most recently completed test results from a test conducted according to the methods and procedures specified in s. NR 439.07, Wis. Adm. Code for the direct stationary source demonstrate that the emissions of the air contaminant for which compliance emission testing is required under this section are 50% or less of the applicable emission limitation.

U.4.a.(3) The direct stationary source associated with the emission point subject to the testing requirement has not operated more than 360 hours in the previous 12 month period prior to the scheduled test date.

U.4.a.(4) The most recently completed test, conducted according to the methods and procedures specified in s. NR 439.07, Wis. Adm. Code, was conducted less than 12 months prior to the date that testing would be required under s. NR 439.075(3)(b), Wis. Adm. Code.

U.4.b. The department may grant an extension of up to 180 days for compliance emission testing if the owner or operate of a direct stationary source requests an extension, in writing, and can demonstrate that a representative emissions test cannot be performed within the time frames specified in this permit and/or s. NR 439.075(3)(b), Wis. Adm. Code.

U.4.c. All requests for waivers under condition U.4. shall be submitted in writing for department review and approval at least 60 days prior to the required test date.

[ss. NR 407.09(4)(a)1. and NR 439.075(4), Wis. Adm. Code, s. 285.65(3), Wis. Stats.]

U.5. Whenever emission testing is required, the permittee shall use the reference test methods listed under U.5. of this section. An alternate method to these reference test methods may be used if approved in writing by the Department. [ss. NR 439.06 and NR 484.04, Wis. Adm. Code]

U.5.a. <u>Reference Test Methods for Nonfugitive Particulate Matter:</u> Whenever compliance emission testing is required for a nonfugitive particulate matter emission limitation, the permittee shall use the appropriate Method 5, 5A, 5B, 5D, 5E, 5F, 5G, 5H, 5I, or 17 in 40 CFR part 60, Appendix A, and when required Method 202 in 40 CFR part 51, Appendix M. [s. NR439.06(1), Wis. Adm. Code]

U.5.b. <u>Reference Test Methods for Nonfugitive PM_{10} and $PM_{2.5}$ Emissions:</u> Whenever compliance emission testing is required for a nonfugitive PM_{10} or $PM_{2.5}$ emission limitation, the permittee shall use Method 201 or 201A and when required Method 202 in 40 CFR part 51, Appendix M. [ss. NR 439.06(1m) and NR439.06(8), Wis. Adm. Code]

U.5.c. Reference Test Method for Sulfur Dioxide Emissions: Whenever compliance emission testing of a sulfur dioxide (SO_2) emission limitation is required, the permittee shall use Method 6, 6A, 6B, 6C, or 8 in 40 CFR part 60, Appendix A. [s. NR 439.06(2)(a), Wis. Adm. Code]

U.5.d. Reference Test Method for Volatile Organic Compound Emissions: Whenever compliance emission testing of a volatile organic compounds (VOC) emission limitation is required, the permittee shall use Method 18, 25, 25A or 25B in 40 CFR part 60, Appendix A. [s. NR 439.06(3)(a), Wis. Adm. Code]

U.5.e. Reference Test Method to Determine the Capture Efficiency of a Control System for Volatile Organic Compound Emissions: Whenever capture efficiency testing of VOC emissions is required, the permittee shall use Method 204, 204A, 204B, 204C, 204D, 204E, or 204F in 40 CFR Part 51, Appendix M, or the data quality objection method or lower confidence limit method in 40 CFR part 63, Subpart KK, Appendix A. When determining the overall emission reduction efficiency of a VOC control system, simultaneous measurements of both the capture efficiency of the system and the pollutant reduction efficiency of the control device may be required. [s. NR 439.06(3)(am), Wis. Adm. Code]

U.5.f. Reference Test Method to Determine Surface Coating Properties: Whenever the organic solvent content, the volume of solids, the weight of solids, the water content and the density of surface coatings, inks, and cleaning materials is required, the permittee shall use Method 24 or 24A in 40 CFR part 60, Appendix A. [s. NR 439.06(3)(b), Wis. Adm. Code]

U.5.g. Reference Test Method for Detecting Organic Compound Emission Leaks: Whenever the detection of organic compound emission leaks is required, the permittee shall use Method 21 in 40 CFR part 60, Appendix A. [s. NR 439.06(3)(c), Wis. Adm. Code]

U.5.h. Reference Test Method to Verify the Vapor Tightness of Gasoline Delivery Tanks: Whenever verification of the vapor tightness of gasoline delivery tanks is required, the permittee shall use Method 27 in 40 CFR part 60, Appendix A. [s. NR 439.06(3)(d), Wis. Adm. Code]

U.5.i. Reference Test Method for Carbon Monoxide Emissions: Whenever compliance emission testing of a carbon monoxide (CO) emission limitation is required, the permittee shall use Method 10, 10A, or 10B in 40 CFR part 60, Appendix A. [s. NR 439.06(4), Wis. Adm. Code]

U.5.j. Reference Test Method for Lead Emissions: Whenever compliance emission testing of a lead (Pb) emission limitation is required, the permittee shall use Method 12 in 40 CFR part 60, Appendix A. [s. NR 439.06(5), Wis. Adm. Code]

U.5.k. Reference Test Methods for Nitrogen Compound Emissions: Whenever compliance emission testing of a nitrogen compound (NOx) emission limitation is required, the permittee shall use EPA Method 7, 7A, 7B, 7C, 7D, or 7E in 40 CFR part 60, Appendix A. [s. NR 439.06(6)(a), Wis. Adm. Code]

U.5.l. Reference Test Methods for Total Reduced Sulfur Emissions: Whenever compliance emission testing of a total reduced sulfur (TRS) emission limitation is required, the permittee shall use EPA Method 15A, 16, 16A, or 16B in 40 CFR part 60, Appendix A. [s. NR 439.06(7)(a), Wis. Adm. Code]

U.5.m. Reference Test Method for Visible Emissions: Whenever emission testing of a visible emission limitation is required, the permittee shall use Method 9 in 40 CFR part 60, Appendix A. [s. NR 439.06(9)(a)1., Wis. Adm. Code]

U.5.n. Reference Test Method for a "No Visible Emissions" Requirement: Whenever compliance emission testing is required for a no visible emission limitation, the permittee shall use Method 22 in 40 CFR part 60, Appendix A. [s. NR 439.06(9)(b), Wis. Adm. Code]

V. PSD Source Obligation

V.1. For projects involving existing emissions units at sources that are major stationary sources as defined in s. NR 405.02(22), Wis. Adm. Code, which do not have a PAL [s. NR 405.02(24j), Wis. Adm. Code], where the calculated difference between projected actual emissions using the method specified in s. NR 405.02(25f)(b)1. to 2., Wis. Adm. Code and baseline actual emissions does not exceed the level that is considered significant for the air contaminant, as defined in s. NR 405.02(27), Wis. Adm. Code, the owner or operator shall meet the source obligation requirements in s. NR 405.16(3) and (4), Wis. Adm. Code. [s. NR 405.16(3) and (4), Wis. Adm. Code]